厦门金鹭 XTC

2025

汽车行业加工解决方案

Manufacturing Solutions for Automotive Industry

公司简介 About GESAC

厦门金鹭特种合金有限公司，成立于 1989 年，是一家中外合资的国家级高新技术企业，是国有上市公司厦门钨业股份有限公司的骨干成员。公司致力于高品质钨粉末材料、硬质合金、精密切削工具等钨系列产品的研发、生产，以及行业专业解决方案的提供，是知名的钨粉末、硬质合金及切削工具供应商。

凭借完整钨产业链的产品集成技术研发，以及求实创新的管理理念，厦门金鹭始终保持着强劲的发展势头，为全球用户提供高性价比的钨粉末产品和服务，为现代工业领域解决高硬度、耐高温、耐磨损问题，提供了优良的产品和完善的解决方案，客户遍布全球，享誉海内外。

公司现有员工 3000 多名，拥有 5 个生产基地，4 个境外销售公司和 1 个企业技术中心，独立承担并完成多项“国家科技支撑计划项目”，“国家科技重大专项”，“国家火炬计划项目”，“国家重点新产品”开发项目及省市重点研究课题，被评为“战略性新兴产业骨干企业”、“创新型企业”、“先进技术企业”；荣获包括国家科技进步二等奖等多项专利与奖项；切削工具累计获得发明专利、实用新型专利及外观专利等 400 多项。

Xiamen Golden Egret Special Alloy Co. Ltd., established in 1989, is a Sino-foreign joint venture state-level high-tech enterprise and a key member of the state-owned listed company Xiamen Tungsten Co., Ltd.The company is committed to the research and development and production of high-quality tungsten powder materials, cemented carbide, precision cutting tools and other tungsten products, as well as the provision of professional solutions in the industry. It is a well-known supplier of tungsten powder, cemented carbide and cutting tools.

With the product integration technology research and development of the complete tungsten industry chain, as well as the realistic and innovative management concept, Golden Egret has always maintained a strong development momentum, providing cost-effective tungsten powder products and services for global users, and solving high hardness, resistance to High temperature, wear resistance, provide excellent products and perfect solutions, customers all over the world, well-known at home and abroad.

The company has more than 3,000 employees, 5 production bases, 4 overseas sales companies and 1 enterprise technology center. Planning Project", "National Key New Product" development project and provincial and municipal key research topics, and was rated as "Strategic Emerging Industry Backbone Enterprise", "Innovative Enterprise", "Advanced Technology Enterprise"; won the first prize including National Science and Technology Progress Award, the second prize of National Science and Technology Progress Award and many other patents and awards; cutting tools have obtained more than 400 invention patents, utility model patents and appearance patents.

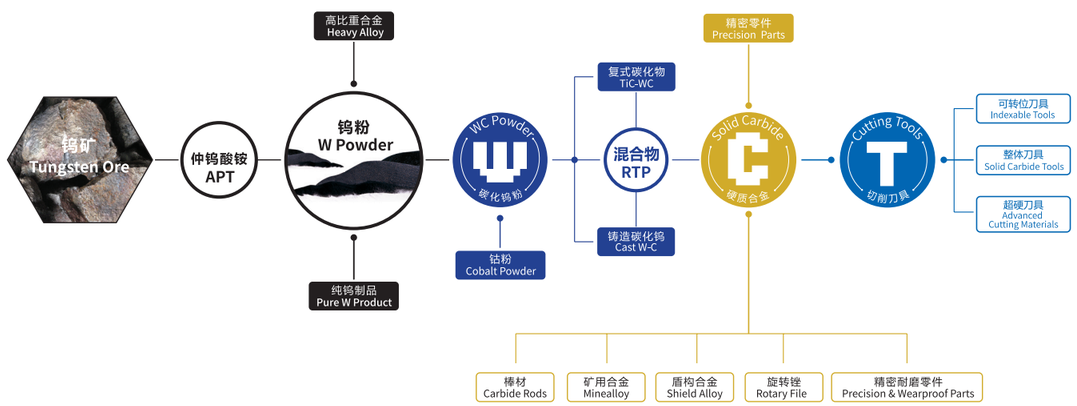

目录
Contents

加工解决方案
Manufacturing Solutions

重点产品介绍
Introduction of Major Products

内铣
Internal Milling

- 高刚性、高精度刀体
  Cutter With High Rigidity And Precision
- 搭配CS1、CS2系列刀片，
  实现高效加工（详见P28）
  Matched with CS1, CS2 Series Inserts to Ensure Efficient Processing.（Details in P28）

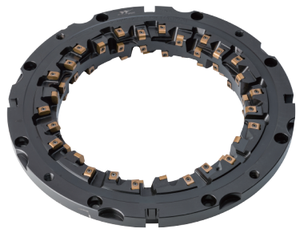

车削加工
Turning

- 通用粗-精车削加工
  （详见《车削刀具产品册》）
  General Rough-finish Turning
  （Details in《The Catalogs Of Turning Tools》）

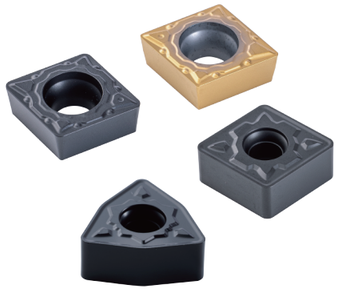

车车拉
Broaching

- 高刚性、高精度模块化刀体
  Modular Cutter With High Rigidity And Precision
- 刀片灵活布置，确保高效加工
  Flexible Inserts Arrangement Ensures High Productivity

端面铣削
Face Milling

- SNMU+MFB145/245/288
  高强度通用铣削
  High Intension General Face Milling
- HNGU+MFC145/160
  高精度通用铣削
  High Precision Universal Milling

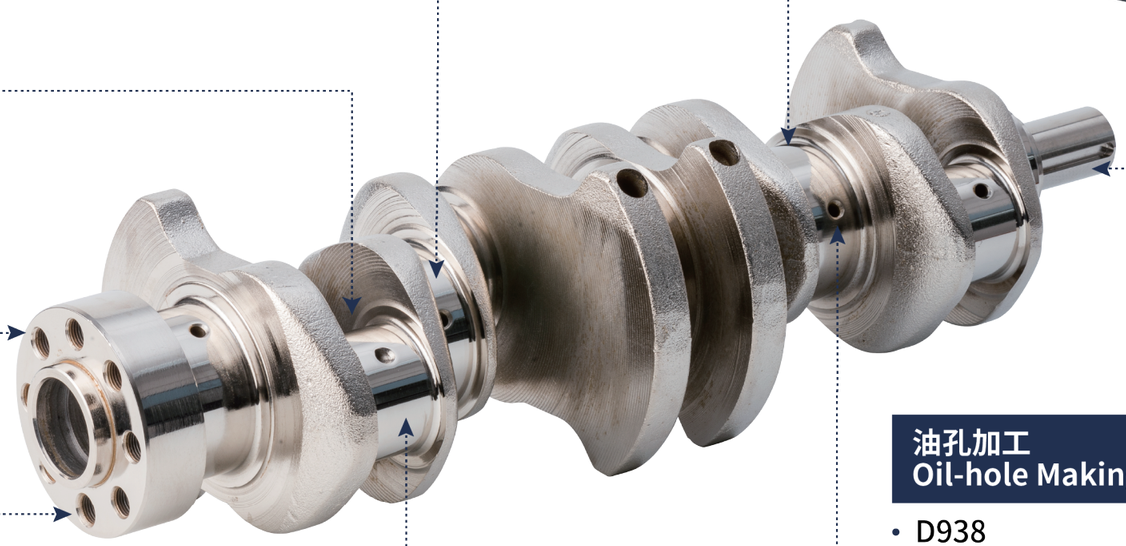

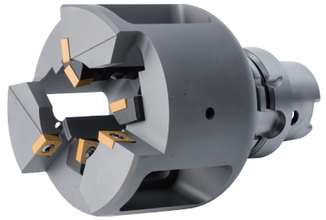

孔加工
Hole Making

- D918S
  普通钢加工硬质合金麻花钻
  Solid Carbide Twist Drill for Steel
- QPMG+GHDS
  高效可转位钻头
  High Efficiency Indexable Drill
- GUMD
  GUMD可换式钻头
  Head Changeable Drill
- ET138-SJN
  钢用加工螺旋丝锥
  Steel Machining Spiral Fluted Tap

油孔加工
Oil-hole Making

- D938
  深孔内冷麻花钻（详见P32）
  Deep-hole Inner Cooling Twist Drill（Details in P32）

套车
Rotatory Turning

- 高效复合加工
  High Efficience Combination Tool

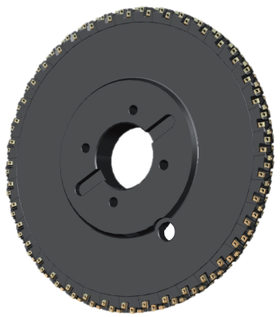

外铣
External Milling

- 高精度超密齿刀盘，实现高速、高效加工
  High Precision Super Dense Pitch Cutter Enable
  High Speed , High Precision Machining
- 减少换刀次数，降低成本
  Reduce Tool Change Frequency
  And Production Costs

涡轮增压排气歧管 Turbocharger Exhaust Manifold

外圆/内孔加工
Outer Circle & Internal Hole Machining

- 通用粗-精车削加工
  （详见《车削刀具产品册》）
  General Rough-finish Turning
  （Details in《The Catalogs Of Turning Tools》）
- **非标定制镗刀**
  Customized Combination Tool
- **非标定制套车**
  Combination Tool Increases Productivity

端面槽加工
Grooving

- GT 系列切断切槽刀具
  （详见P29）
  GT Series Groove & Parting off Tools（Details in P29）

打标面/U型孔加工
Signed Face & U-Type Hole Maching

- **SN200**
  高温合金高性能加工立铣刀
  High Performance Endmill for Heat Resistant Super Alloy
- **SS600**
  不锈钢高性能加工立铣刀
  High Performance Endmill for Stainless Steel
- 非标阶梯立铣刀
  Customized Endmill

环槽/V带槽加工
Ring & V –Type Grooving

- **非标定制槽刀（详见P33）**
  Customized Grooving Tool（Details In P33）

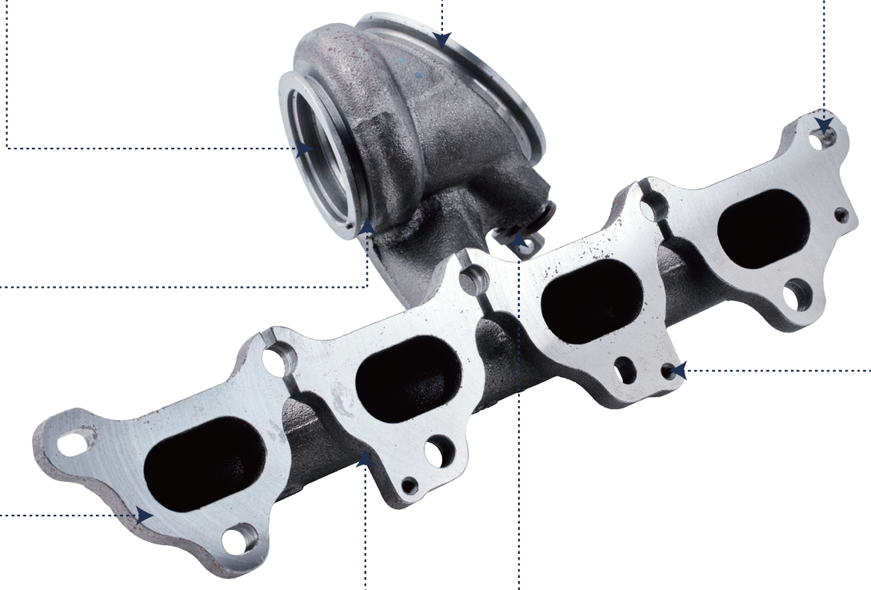

孔加工
Hole Making

- **D968S**
  不锈钢加工硬质合金麻花钻
  Drills for Stainless Steel Applications
- **非标定制阶梯钻**
  Customized Step Drill
- **非标定制铰刀**
  Customized Reamer
- **ET138-SJN**
  钢用加工螺旋丝锥
  Steel Machining Spiral Fluted Tap

法兰面铣削
Face Milling

- **HNKU+MFC145**
  高经济型通用铣削
  High Economical General Face Milling
- **ONEU+MFG140**
  高精加工平面铣削
  High Precision Face Milling

衬套孔/凸台面加工
Sleeve hole & Platform Machining

- **SDKT+MES190**
  经济型正型4刃方肩铣削
  Economical Positive 4 Edges Shoulder Milling
- **非标定制刀体**
  Customized Tool Body

汽车行业加工解决方案 Manufacturing Solutions for Automotive Industry

连接、定位、冷却孔加工
Connecting & Positioning & Cooling Hole Making

- D966
  铝合金加工专用钻头
  Aluminum Alloy Machining Drill
- SA100
  铝合金高效加工立铣刀
  Aluminum Alloy Machining High Efficiency Endmill
- PCD 铰刀
  PCD Reamer
- 螺纹铣刀
  Thread Endmill
- 铝合金加工硬质合金内冷丝锥
  Aluminum Alloy Processing Carbide Inner Cooling Tap

端面加工
Face Milling

- PCD 高精面铣刀
  PCD High-precision Face Milling

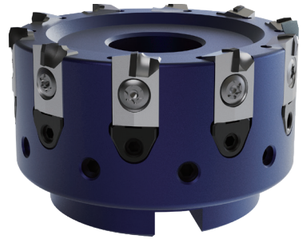

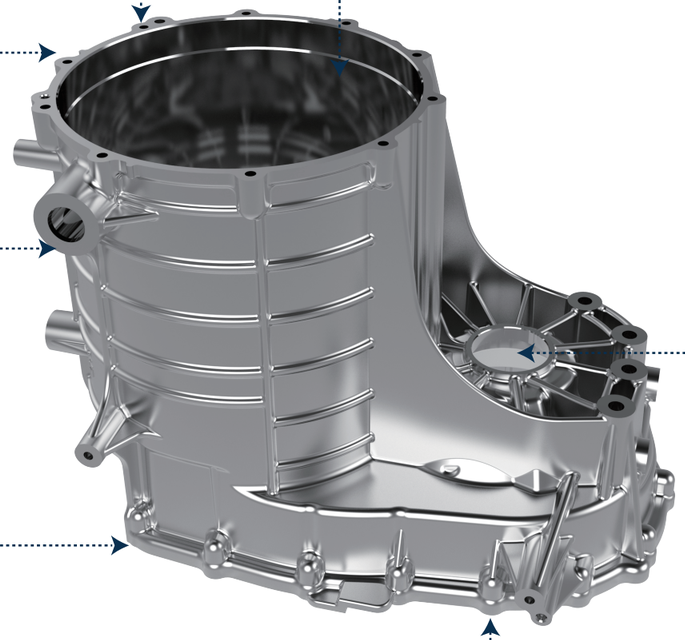

定子孔加工
Stator Hole Making

- 非标定制粗加工 PCD 镗刀
  PCD High-precision Face Milling
- 非标定制精加工 PCD 可调镗刀（可调范围：轴向调节 1mm, 径向调节 ±0.6mm）
  Customized PCD Adjustable Finish Boring
  （adjustment range: axial for 1mm, radial for ±0.6mm）

凸台加工、成型腔加工
Convex Processing & Pocketing

- XDHT+MEH190
  正型两刃铝合金方肩铣
  Positive 2 Edges Aluminum Alloy Machining Shoulder Milling
- APKT+MEB190
  正型两刃方肩铣
  Positive 2 Edges Shoulder Milling

轴承孔钢件衬套加工
Bearing Hole Making

- 非标定制粗加工复合镗刀
  Customized Rough Composite Boring
- 非标定制粗加工反镗刀
  Customized Rough Anti Boring
- 非标定制精加工正反镗刀
  Customized Finish Positive and Negative Boring
- 非标定制精加工 PCD 导条铰刀
  Customized Finish PCD Reamer

轴承孔、安装孔加工
Bearing Hole Making

- 非标定制 PCD 复合铰刀
  Customized PCD Composite Reamer

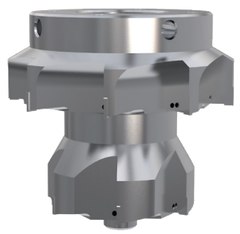

键槽加工
Slotting

- 电机轴专用铣刀（详见 P31）
  Special Milling Cutter for Motor Shaft
  （Details in P31）
- SH360
  键槽热后铣削加工
  Keyway Milling after Heat Treatment
- 非标定制锥度铣刀
  Customized Taper Endmill

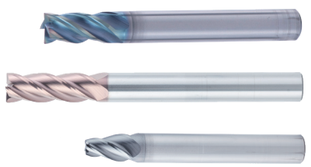

注油孔加工
Oil Hole Making

- D918S
  普通钢加工硬质合金麻花钻
  Solid Carbide Twist Drill for Steel

车削加工
Turning

- 通用粗 - 精车削加工
  （详见《车削刀具产品册》）
  General Rough-finish Turning
  （Details in 《The Catalogs
  Of Turning Tools》）

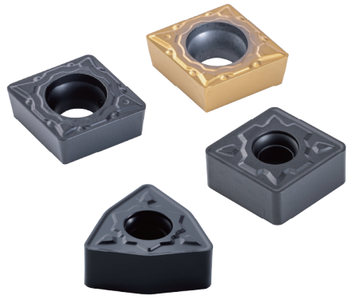

内花键加工
Internal Spline Processing

- 非标定制插铣刀
  Customized Pinion Cutter

热后硬车
Turning After Heat Treatment

- PCBN 车削加工
  PCBN Turning

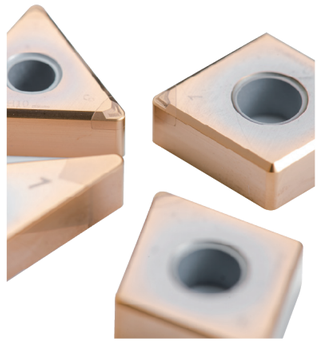

孔加工
Hole Making

- D938
  深孔内冷麻花钻（详见 P32）
  Deep-hole Inner Cooling Twist Drill
  (Details in P32)
- GUMD 可换式钻头
  GUMD Head Changeable Drill
- QPMG+GHDS
  高效可转位钻头
  High Efficiency Indexable Drill

内腔加工、凸台柱加工
Internal & Convex Column Processing

- SA100/SA100-DLC
  铝合金高效加工立铣刀
  Aluminum Alloy Machining High Efficiency Endmill
- PCD 铣刀
  PCD Endmill

连接面加工、凸台平面加工
Face Milling & Convex Processing

- XDHT+MEH190
  正型两刃铝合金方肩铣
  Positive 2 Edges Aluminum Alloy Machining Shoulder Milling
- APET+MEB190
  正型两刃铝合金方肩铣
  Positive 2 Edges Aluminum Alloy Machining Shoulder Milling
- PCD 面铣刀
  PCD Face Milling

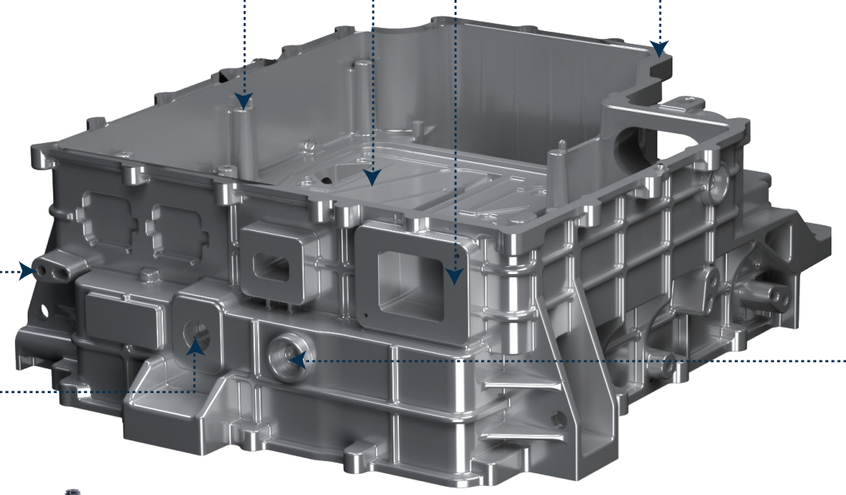

孔加工
Hole Making

- D966
  铝合金加工专用钻头
  Aluminum Alloy Machining Drill
- 非标定制直槽钻
  Customized Straight Drill
- PCD 钻铰刀
  PCD Drilling Reamer
- 铝合金加工硬质合金内冷丝锥
  Aluminum Alloy Processing Carbide Inner Cooling Tap

反铣加工
Reversed Milling

- 非标定制反铣刀
  Customized Reversed Endmill

差速器壳体 Differential Housing

车削加工
Turning

- 通用粗-精车削加工
  (详见《车削刀具产品册》)
  General Rough-finish Turning\
  (Details in《The Catalogs Of Turning Tools》)

油槽加工
Oil Slot Machining

- 非标定制刀具CC09T3/TC1603
  (详见P34)
  Customized TCC09T3/TTC1603
  (Details in P34)

切槽加工
Grooving

- GT 系列切断切槽刀具(详见P29)
  GT Series Groove & Parting off Tools
  (Details in P29)

销孔端面铣削
Pin Hole Face Milling

- PP300
  高效加工立铣刀
  High Efficiency Endmill
- D938
  深孔内冷麻花钻(详见P32)
  Deep-hole Inner Cooling Twist Drill (Details in P32)

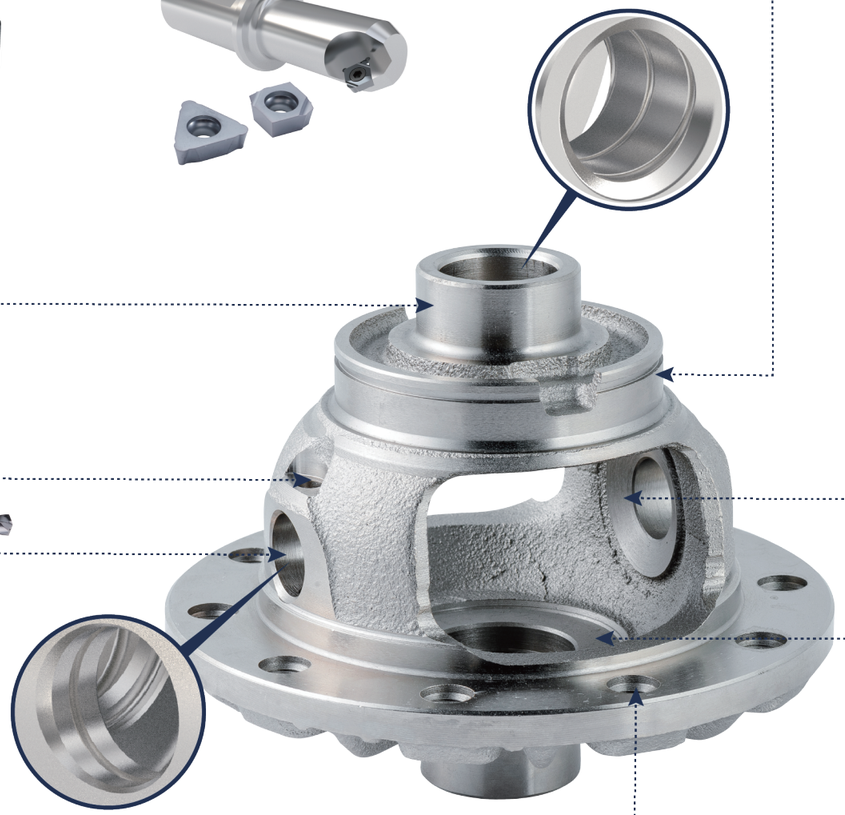

内球面加工
Inner Sphere Making

- DCGW+非标定制减震刀杆
  DCGW + Customized Cutter

半轴齿轮面车削
Axle Shaft Gear Face Turning

- CCGT+非标定制减震刀杆
  CCGT + Customized Cutter

轴孔加工
Hole Making

- QPMG+GHDS
  高效可转位钻头
  High Efficiency Indexable Drill
- 非标定制铰刀
  Customized Straight Fluted Drill
- MB系列微小径精镗刀
  MB Mini Precision Boring Tool
- 非标定制可转位倒角铣刀
  Customized Chamfer Milling
- 非标定制反倒角铣刀
  Customized Back Chamfer Milling
- 非标定制环槽铣刀
  Customized Inner Ring Groove Milling

法兰孔加工
Hole Making

- D918S
  普通钢加工硬质合金麻花钻
  Solid Carbide Twist Drill for Steel
- ET128-HJC
  内冷铸铁加工直槽丝锥
  Internal Coolant Cast Iron
  Machining Straight Fluted Tap

汽车行业加工解决方案 Manufacturing Solutions for Automotive Industry

车削加工
Turning

- 通用粗 - 精车削加工
  （详见《车削刀具产品册》）
  General Rough-finish Turning
  （Details in 《The Catalogs Of Turning Tools》）

切槽加工
Grooving

- GT 系列切断切槽刀具 (详见 P29)
  GT Series Groove & Parting off Tools
  （Details in P29）

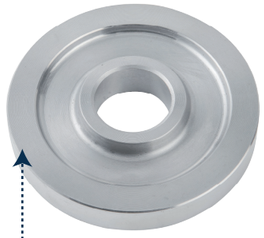

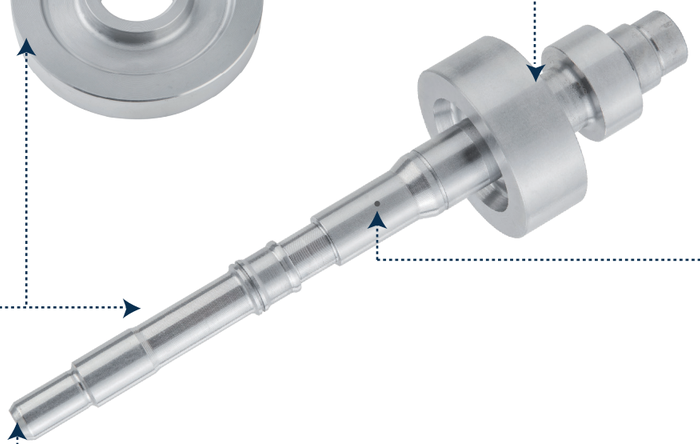

注油孔加工
Hole Making

- D918S
  普通钢加工硬质合金麻花钻
  Solid Carbide Twist Drill for Steel

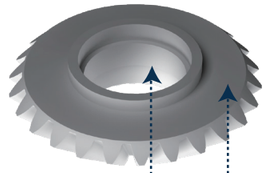

孔加工
Hole Making

- D918S
  普通钢加工硬质合金麻花钻
  Solid Carbide Twist Drill for Steel
- GUMD
  可换式钻头系列
  Head Changeable Drill
- D938
  深孔内冷麻花钻（详见 P32）
  Deep-hole Inner Cooling Twist Drill
  (Details in P32)
- QPMG+GHDS
  高效可转位钻头
  High Efficiency Indexable Drill

热后硬车
Turning after Heat Treatment

- PCBN 车削加工
  PCBN Turning

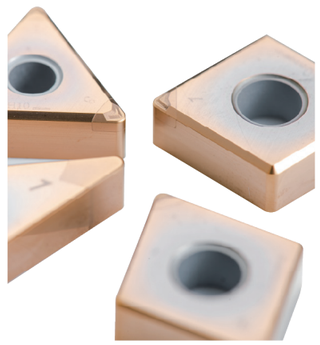

连接面加工、凸台平面加工
Connecting & Convex Surface Machining

- XDHT+MEH190
  正型两刃铝合金方肩铣
  Positive 2 Edges Aluminum Alloy Machining Shoulder Milling
- APET+MEB190
  正型两刃铝合金方肩铣
  Positive 2 Edges Aluminum Alloy Machining Shoulder Milling
- PCD 面铣刀
  PCD Face Milling

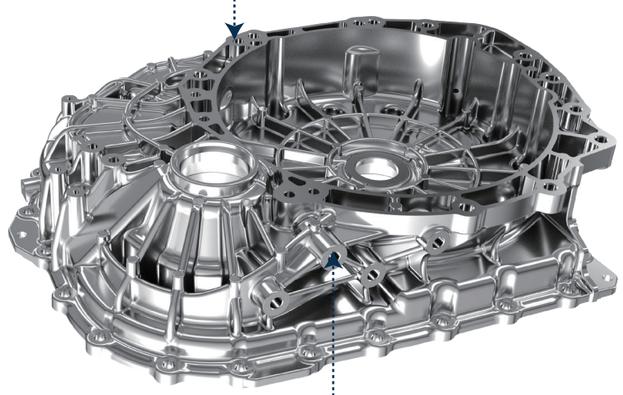

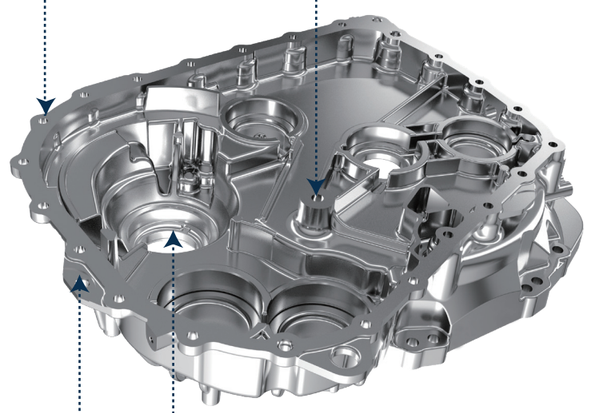

内腔加工、凸台柱加工
Internal & Convex Column Processing

- SA100/SA100-DLC
  铝合金高效加工立铣刀
  Aluminum Alloy Machining High Efficiency Endmill
- PCD 铣刀
  PCD Endmill

孔加工
Hole Making

- D966
  铝合金加工专用钻头
  Aluminum Alloy Machining Drill
- 非标定制直槽钻
  Customized Straight Drill
- PCD 钻铰刀
  PCD Drilling Reamer
- 铝合金加工硬质合金内冷丝锥
  Aluminum Alloy Processing Carbide Inner Cooling Tap

轴承孔、安装孔加工
Bearing & Mounting Hole Making

- 非标定制粗加工复合镗刀
  Customized Rough Composite Boring Tool
- 非标定制 PCD 可调铰刀
  Customized PCD Adjustable Reamer
- 非标定制 PCD 复合铰刀
  Customized PCD Composite Reamer

外圆端面车削加工
External & Face Machining

- 通用粗 - 精车削加工
  （详见《车削刀具产品册》）
  General Rough-finish Turning
  （Details in 《The Catalogs Of Turning Tools》）

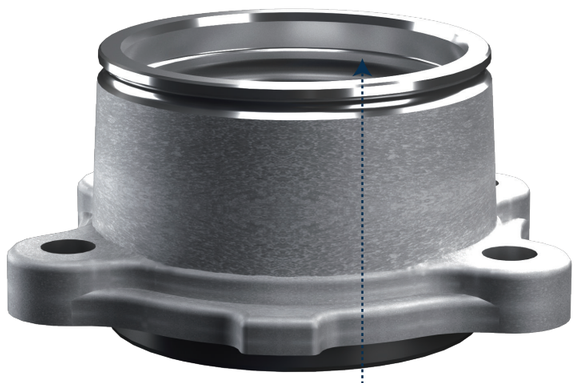

螺纹孔加工
Thread Hole Making

- D918S 系列麻花钻
  Solid Carbide Twist Drill for Steel
- D101 系列定心钻
  D101 Series Center Drill
- 非标定制阶梯钻
  Customized Step Drill
- 定制丝锥
  Customized Taper

淬火滚道车削加工
Raceway Machining after Heat Treatment

- PCBN 车削加工
  PCBN Turning

内孔加工
Inner Hole Machining

- 通用正型车削加工
  General Positive Turning

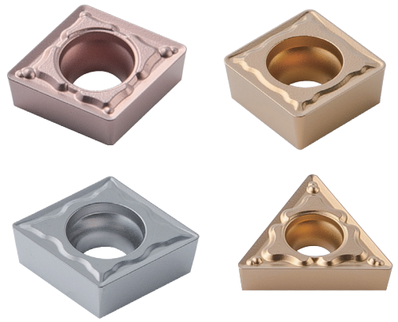

端面铣削
Face Milling

- SNMU+MFB145/245/288
  高强度通用铣削
  High Intension General Face Milling
- HNGU+MFC145/160
  高精度通用铣削
  High Precision Universal Milling

轴头/法兰盘加工
Turning

- 通用粗-精车削加工
  （详见《车削刀具产品册》）
  General Rough-finish Turning
  (Details in《The Catalogs Of Turning Tools》)

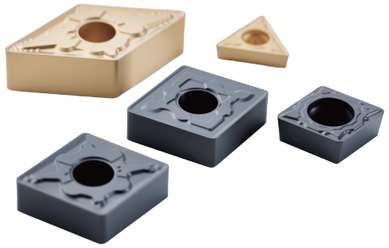

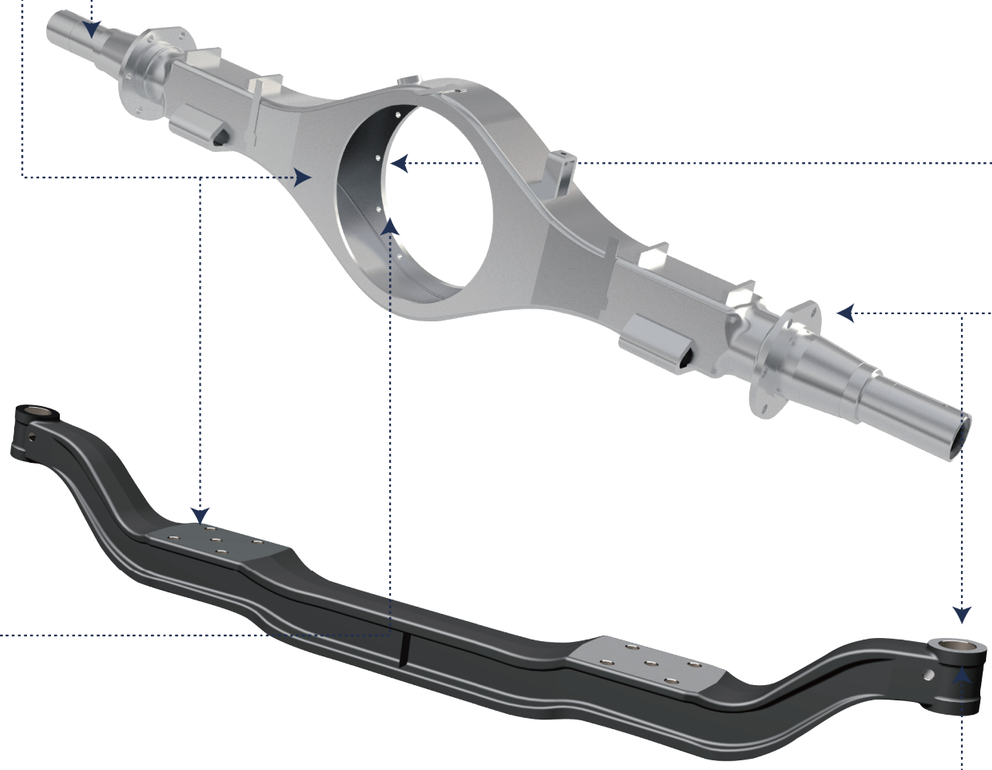

大盘面缺口加工
Side Milling

- SP210
  高效加工立铣刀
  High Efficiency Endmill for Steel

孔加工
Hole Making

- D918S
  普通钢加工硬质合金麻花钻
  Solid Carbide Twist Drill for Steel
- QPMG+GHDS
  高效可转位钻头
  High Efficiency Indexable Drill
- GUMD
  GUMD可换式钻头（详见P26）
  Head Changeable Drill (Details in P26)
- ET138-SJN
  钢用加工螺旋丝锥
  Steel Machining Spiral Fluted Tap

大盘面内孔加工
Hole Making

- GBR-LRB
  桥式粗镗刀
  Bridge-type Rough Boring System
- GBR-LFB
  桥式精镗刀
  Bridge-type Finish Boring System

外圆铣削
Shoulder Milling

- ANKX+MHC190
  高强度玉米铣削
  High Strength Corn Milling

铝合金转向节 Alumium Alloy Steering Knuckle

精铰孔
Reaming

- PCD 复合成型铰刀
  PCD Forming Reamer

主轴孔二次开粗
Shaft Hole Roughing

- 一体式复合成型刀
  PCD Integrated Forming Reamer

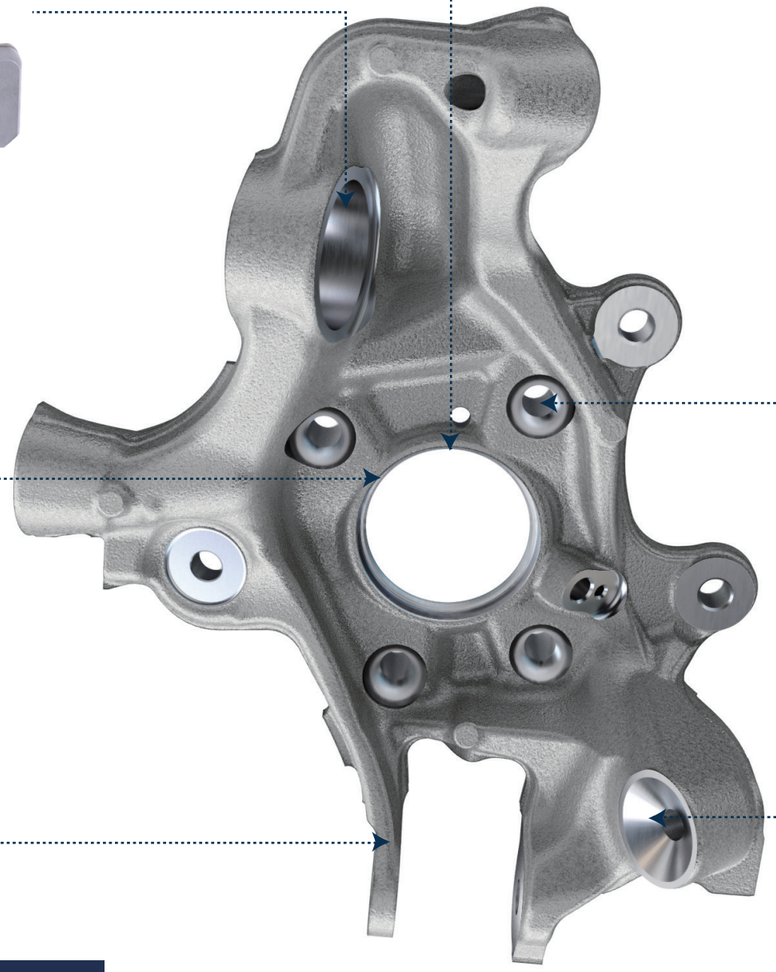

球窝加工
Spherical Hole Processing

- 球窝成型刀
  Spherical Forming Drill

主轴承成型精加工
Bearing Forming Finishing

- PCD 一体式成型刀
  PCD Integrated Forming Reamer

锥窝加工
Conical Hole Processing

- 锥窝成型刀
  Conical Forming Drill

连接面铣削加工
Connection Surface Milling

- XDHT+MEH190
  正型两刃铝合金方肩铣
  Positive Aluminum Alloy Shoulder Milling with 2-edge

汽车行业加工解决方案 Manufacturing Solutions for Automotive Industry

安装面加工
Mounting Surface Machining

- **D918S**
  普通钢加工硬质合金麻花钻
  Solid Carbide Twist Drill for Steel
- **SP210**
  高效加工立铣刀
  High Efficiency End Mill
- **UP210**
  通用加工倒角铣刀
  Universal Machining Chamfered Milling Cutter
- **APMT+MEA190**
  正型两刃方肩铣
  Positive 2 Edges Shoulder Milling

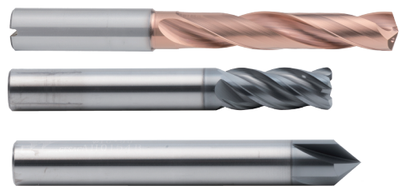

孔加工
Hole Making

- **GUMD系列**
  GUMD可换式钻头
  Head Changeable Drill
- **D968S**
  不锈钢加工硬质合金麻花钻
  Drills for Stainless Steel Applications
- 非标定制锪刀
  Customized Countsink
- 非标定制铰刀
  Customized Reamer

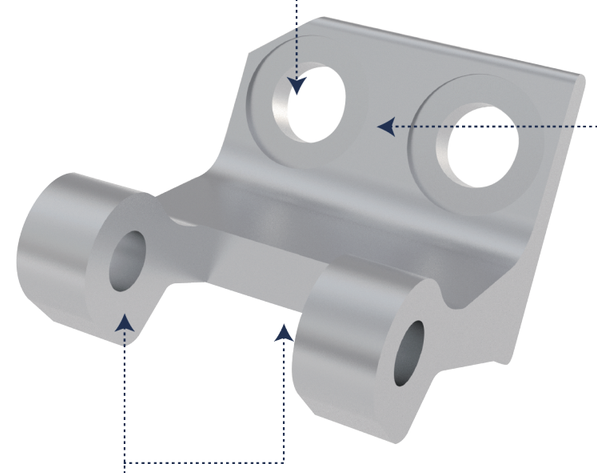

底座面加工
Base Surface Machining

- **RDET+MPA100**
  高精正型平面铣削
  High Precision Positive Face Milling

铣台面
Milling

- **SS600**
  高效加工立铣刀
  High Efficiency End Mill

方形孔加工
Hole Making

- **SP210**
  高效加工立铣刀
  High Efficiency End Mill

铣开档面
Milling

- **SNMU**
  双面八刃面铣刀具
  Double-sided Eight-edged Face Milling Blades
- **CNEU**
  三面刃铣削刀具
  Slot Milling Blades
- **TPGW**
  门铰链面铣专用刀具
  Door Hinge Face Milling Blades

曲轴内外铣刀具

Crankshaft internal and external milling tool

厦门金鹭对于直径 150-750mm 的内外铣刀盘，轴向及径向跳动精度控制在 0.02-0.03mm 以内，接受普通及可调式精铣刀夹定制，曲轴刀片尺寸关键尺寸精度可达 ±0.01mm，一致性控制标准 0.008mm。

For 150-750mm diameter of the inner and outer milling cutter head, the axial and radial runout accuracy is controlled within 0.02-0.03mm, accept ordinary and adjustable finishing milling cutter clamp customization, crankshaft blade size key dimension accuracy up to ±0.01mm, consistency control standard 0.008mm.

目前已推出 CS1 及 CS2 系列刀片，其中 CS1 系列刀片刀尖强度高，适用于大余量柴油机曲轴加工，CS2 系列刀片刃口锋利，适用于汽油机及小型柴油机曲轴加工。

At present, CS1 and CS2 series blades have been launched. CS1 series blades have high blade tip strength and are suitable for crankshaft processing of large surplus diesel engines. CS2 series blades have sharp edge and are suitable for crankshaft processing of gasoline engines and small diesel engines.

	刀片规格 Specification	CS1-N	CS1-D	CS1-Q	CS1-T
CS1 系列刀片 CS1 series blades	刀片外形 Shape				
（非标定制） (Customization)	加工部位 Processing site	 轴 颈	 内 档	 外 档	 沉割槽

	刀片规格 Specification	CS2-N	CS2-D	CS2-Q	CS2-T
CS1 系列刀片 CS1 series blades	刀片外形 Shape				
					
（非标定制） (Customization)	加工部位 Processing site	 轴 颈	 内 档	 外 档	 沉割槽

曲轴外铣加工 Crankshaft external milling machining	
刀具规格 Specification	LNE141109M、LNE221107M
加工材料 Material	SAE1538MV (27-33HRC)
切削速度 Cutting speed	Vc=220m/min
进给速度 Feed rate	f=0.37mm/r
切削量 Cutting amount	ap=1.5-2.5mm
切削方式 Cutting method	外铣加工 External milling
冷却方式 Cooling method	干切 Dry cut

工件加工

机床加工

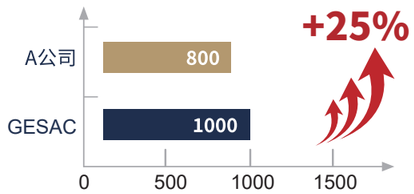

刀具寿命/件 Tool life/pcs

GT 系列切断切槽刀具 GT series groove & parting off tools

主推槽型 Main recommendation of geometry

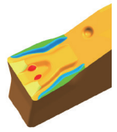

低进给车削 - FT 槽型
Low Feed Turning-FT

使用无刃宽及曲率卷屑臂设计。

The geometry adopts rolling arm design without edge width.

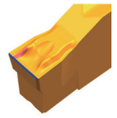

低进给切槽 - FG 槽型
Low Feed Grooving-FG

采用精磨的无刃宽切削刃，保证切削锋利性。

The cutting edges with fine ground to ensure cutting sharpness.

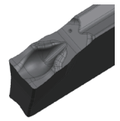

中等进给切断 - MC 槽型
Medium Feed Part Off-MC

C 型切削刃设计，保证刃口锋利的同时提高卷屑效果。

The C-shaped edge design ensures the sharpness while further improving the chip rolling effect.

中等进给仿形 - MR 槽型
Medium Feed Profiling-MR

采用雪花形断屑槽，可满足不同切深的断屑需求。

Adopting snowflake shaped geometry to ensure the chip breaking requirements of different cutting.

主推牌号 Main recommendation of geometry

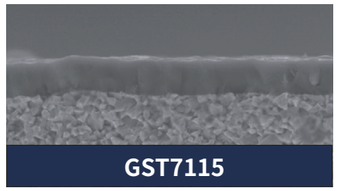

GST7115

适用于精到半精加工工况。

Suitable for finishing to semi finishing conditions

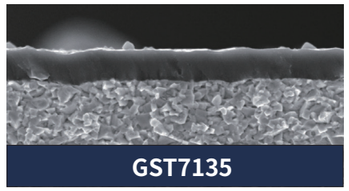

GST7135

适用于粗加工等不稳定工况。

Suitable for unstable working conditions such as roughing

输入轴端面槽加工 Processing of input shaft end face groove	
刀具规格 Specification	GTD400F200-MR-GST7115
加工材料 Material	20MnCrSH（HB156-197）
切削速度 Cutting speed	粗加工（Rough machining）：1600r/min 精加工（Finish machining）：2000r/min
进给速度 Feed rate	粗加工（Rough machining）：0.3mm/z 精加工（Finish machining）：0.25mm/z
切削量 Cutting amount	粗加工（Rough machining）：ap=1mm 精加工（Finish machining）：ap=0.15-0.2mm
切削方式 Cutting method	切槽 Groove
冷却方式 Cooling method	水基乳化液 / 外冷 Water-based emulsion/external

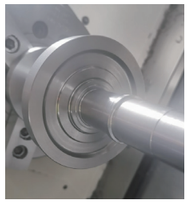

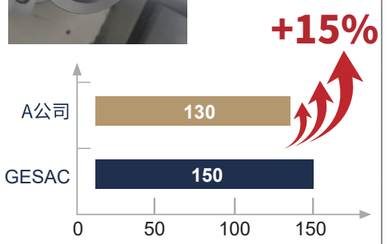

刀具寿命/件 Tool life/pcs

钢车升级产品 Upgraded products for steel turning

- 精加工 PF Finishing geometry-PF

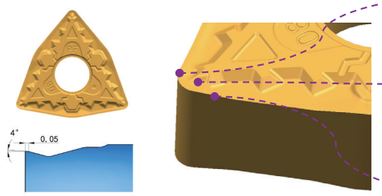

锋利刃口设计 Sharp cutting edge design
提高加工表面质量 Improve the quality of machined surfaces.

半岛型凸起设计 Embossed design of peninsular type
实现小切深下的切屑处理能力 Achieve chip breaking capability under small cutting depth.

刃倾角设计 Cutting edge inclination angle design
降低切削阻力 Reduce cutting resistance.

- 半精加工 PM Semi-finishing geometry-PM

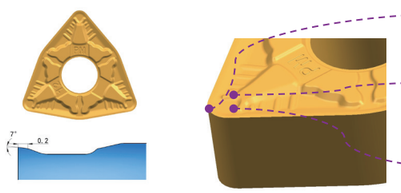

正前角设计 Positive rake angle design
实现低阻力切削 Achieve cutting with low resistance.

双触角凸起设计 Double atennal embossed design
提升小切深断屑能力 Improve chip breaking capability under small cutting depth.

前刀面内凹设计 Concave design of rake face
降低月牙洼磨损，减少切削热产生 Reduce crater wear and cutting heat.

- 粗加工 PR Roughing chip breaker-PR

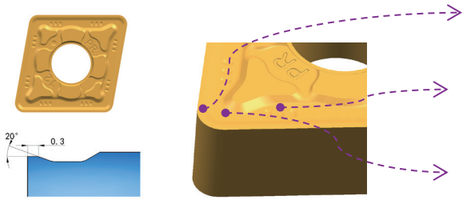

扁平大刃宽设计 Flat cutting width design
提升刃口强度，实现稳定长久加工 Improve cutting edge strength to achieve stable and long-term machining.

减磨槽设计 Flutes design of reducing wear
降低大切深下切削阻力 Reduce cutting resistance under large cutting depth.

大容屑槽设计 Large chip pocket design

输出带轮轴外圆、端面半精加工 External and end face semi-finishing on output pulley shaft	
刀具规格 Specification	WNMG080408-PM-GP1130
加工材料 Material	20CrMnTi（HB197）
切削速度 Cutting speed	N=408r/min Vc=220m/min
进给速度 Feed rate	F=102mm/min fr=0.25mm/r
切削量 Cutting amount	ap=0.5mm
切削方式 Cutting method	外圆 + 端面车削 External and end face turning
冷却方式 Cooling method	水基乳化液 / 外冷 Water-based emulsion/external

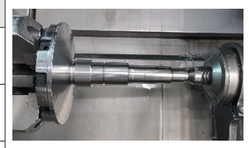

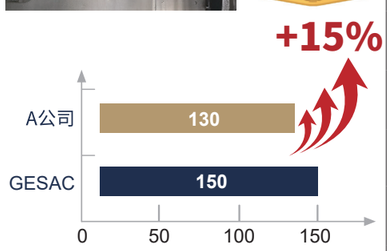

电机轴专用铣刀
Special milling cutter for motor shaft

- 适用于多种加工工况
  Suitable for a variety of processing conditions.

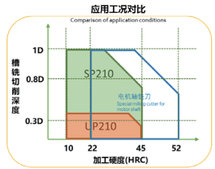

- 不等螺旋、不等齿距设计，槽铣时，抑制高频震颤
  Uniqual spiral flute and unequal pitch design, During slot milling, high-frequency tremor is suppressed.

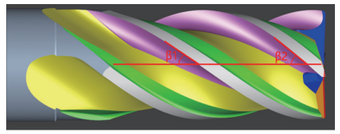

β1 ≠ β2不等螺旋

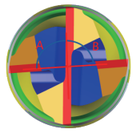

A≠B不等齿距

- 采用特殊的刃口处理，强化刀具刃口刚性，提高刀具耐磨性、抗崩性
  Special edge treatment is applied to enhance the rigidity of the tool edge and improve the tool's wear resistance and resistance to chipping.

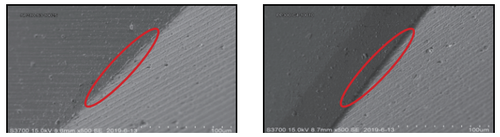

- 多种刃径规格，满足市面上主流键槽尺寸加工要求；特殊尺寸可非标定制
  Multiple blade diameters, Meet the mainstream keyway dimension machining requirements；Special size, can be customized.

电机轴键槽铣削 Keyway Machining of Motor Shaft	
刀具规格 Specification	D5.8*C0.1*11*50*d6
加工材料 Material	20CrMoTi（HRC28-30）
切削速度 Cutting speed	N=4000r/min Vc=73m/min
进给速度 Feed rate	F=450mm/min Fz=0.03mm/r
切削量 Cutting amount	ap=3-5mm ae=5.8mm
切削方式 Cutting method	槽铣 Slotting
冷却方式 Cooling method	水基乳化液 / 外冷 Water-based emulsion/external

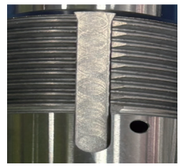

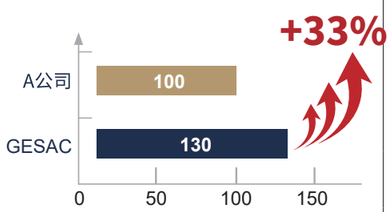

D938深孔内冷麻花钻

D938 Series Deep Hole Internal Coolant Twist Drill

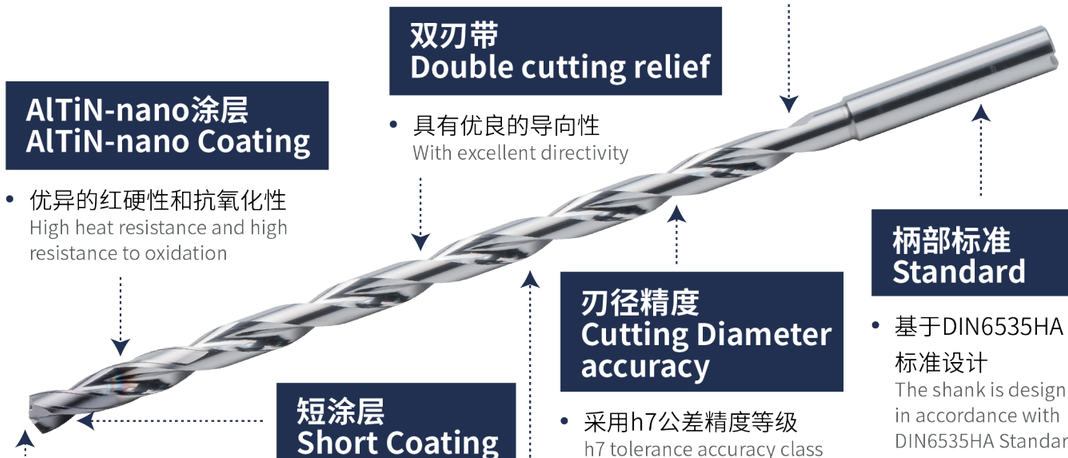

全新的基体材质
New substrate material

- 韧性和耐磨损性的完美平衡
  Perfect balance between toughness and wear resistance

双刃带
Double cutting relief

- 具有优良的导向性
  With excellent directivity

AlTiN-nano涂层
AlTiN-nano Coating

- 优异的红硬性和抗氧化性
  High heat resistance and high resistance to oxidation

柄部标准
Standard

- 基于DIN6535HA标准设计
  The shank is designed in accordance with DIN6535HA Standard

刃径精度
Cutting Diameter accuracy

- 采用h7公差精度等级
  h7 tolerance accuracy class

短涂层
Short Coating

- 超低表面摩擦系数
  Ultra low surface friction coefficient

D938系列钻尖
D938 Series Drill Tip

- 超强的自定心性能和断屑性能
  Superior self-centering and chipbreaking performance

超光滑排屑槽
Super smooth chip flute

- 超低表面摩擦系数
  Ultra low surface friction coefficient

曲轴深孔加工 Crankshaft deep hole machining	
刀具规格 Specification	D938-A20C-0400
加工材料 Material	42CrMo（HRC26-33）
切削速度 Cutting speed	N=3100RPM Vc=39m/min
进给量 Feed	F=341mm/min Fz=0.11mm/z
孔深 hole depth	70mm
切削方式 Cutting method	引导钻预钻孔＋一钻到底 Guided drilling pre-drill + one drill to the bottom
冷却方式 Cooling method	水基乳化液/内冷 Water based emulsion/external cooling

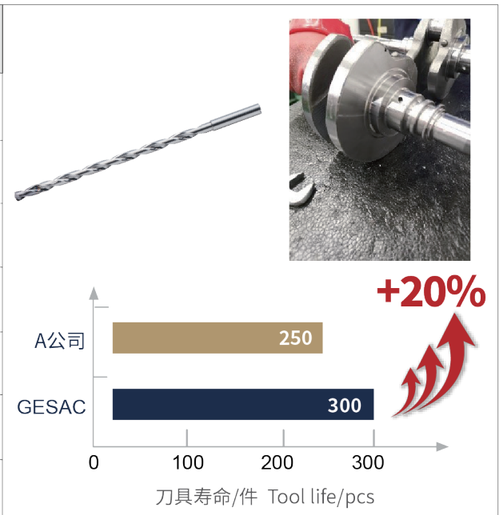

V带槽刀

Customized V-Type Grooving Tool

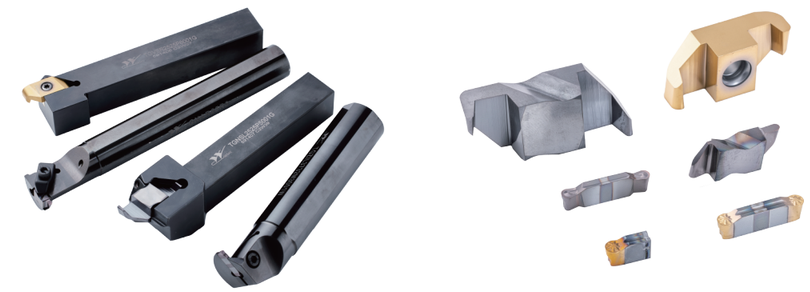

产品特点
Product features:

- 多次修磨，极大限度提升经济性
  Repairable and grindable, greatly improving economy
- 常备通用毛坯，满足不同机型成型尺寸快速定制需求
  General-purpose blanks are always in stock to meet the needs of rapid customization of molding sizes for different models
- 多种刀片形式，满足不同加工深度、避让选择需求
  Various blade forms to meet the needs of different processing depths and collision avoidance options
- 可根据工况进行针对性的牌号搭配。
  Targeted brand matching can be carried out according to working conditions

涡轮增压壳外环槽加工 Turbocharged shell outer ring groove machining	
刀具规格 Specification	KNEU31440820R-GST7115
加工材料 Material	1.4848（HB200）
切削速度 Cutting speed	N=380r/min Vc=110~130m/min
进给量 Feed rate	F=55mm/min fr=0.13~0.15mm/r
切削量 Cutting amount	ap=3mm
切削方式 Cutting method	外环槽粗加工 Rough machining of outer ring groove
冷却方式 Cooling method	水基乳化液/外冷 Water-based emulsion/external

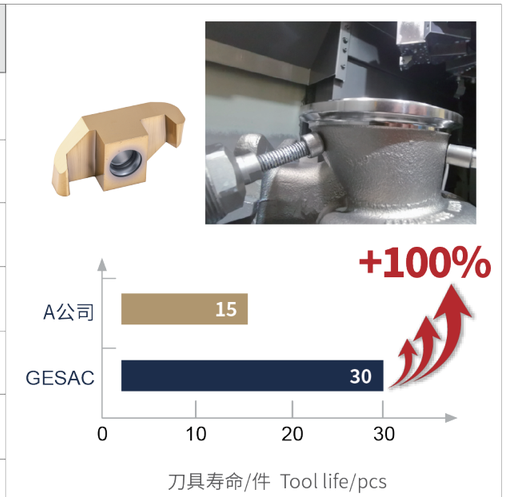

差速器壳体油槽加工刀具

Differential housing oil groove processing tool

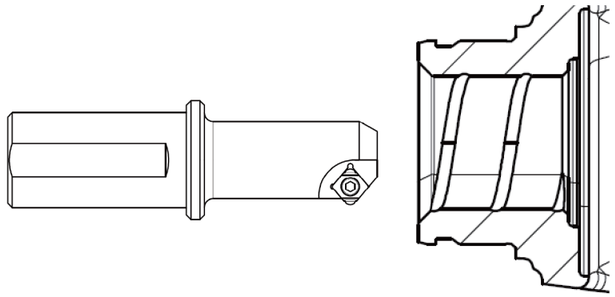

产品特点
Product features:

- 刀尖根据油槽尺寸进行非标定制
  The tool tip is customized according to the size of the oil groove
- 搭配韧性优异的牌号 GM3225
  With excellent toughness brand GM3225
- 多刃口设计，提升加工产品经济性
  Multi-edge design, improve the economy of processed products
- 常备基体库存，交货周期短
  The matrix stock is always available, the delivery time is short

差速器油槽加工 Differential housing oil groove machining	
刀具规格 Specification	PTCCET09T320-GM3225
加工材料 Material	45#（HRC20）
切削速度 Cutting speed	N=680r/min Vc=108m/min
进给速度 Feed rate	F=55mm/min Fn=0.08mm/r
切削量 Cutting amount	ap=0. 3mm
切削方式 Cutting method	内圆车削 Inner hole turning
冷却方式 Cooling method	水基乳化液 / 外冷 Water-based emulsion/external

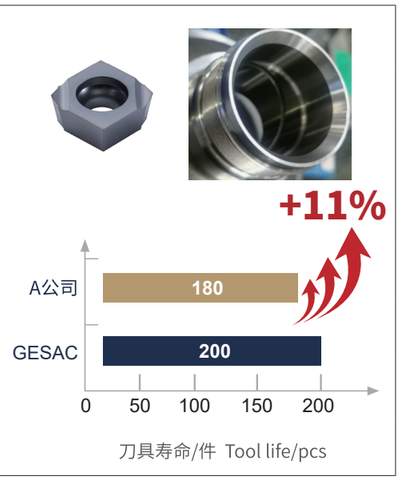

MEMO

厦门金鹭特种合金有限公司
XIAMEN GOLDEN EGRET SPECIAL ALLOY CO.,LTD.

地址：中国厦门市湖里区兴隆路69号
Add: No.69 Xinglong Road Huli District Xiamen CHINA
工厂地址：中国厦门同安工业集中区集成路1601-1629号
Factory Add: No.1601-1629 Jicheng Road Industrial Concentration Area Tongan Xiamen CHINA
Tel: +86-592-7310203
Fax: +86-592-7107322
PC: 361006
Email: GJ.GLB@CXTC.COM

www.gesac-tools.com

400-998-6858

GE202503f