厦门金鹭

2025

能源及重工行业加工解决方案

Manufacturing Solutions for Energy & Heavy Industry

厦门金鹭特种合金有限公司

XIAMEN GOLDEN EGRET SPECIAL ALLOY CO.,LTD.

地址：中国厦门市湖里区兴隆路69号
Add: No.69 Xinglong Road Huli District Xiamen CHINA
工厂地址：中国厦门同安工业集中区集成路1601-1629号
Factory Add: No.1601-1629 Jicheng Road Industrial Concentration Area Tongan Xiamen CHINA
Tel: +86-592-7310203
Fax: +86-592-7107322
PC: 361006
Email: GJ.GLB@CXTC.COM

www.gesac-tools.com

400-998-6858

GE202503k

公司简介 About GESAC

厦门金鹭特种合金有限公司，成立于 1989 年，是一家中外合资的国家级高新技术企业，是国有上市公司厦门钨业股份有限公司的骨干成员。公司致力于高品质钨粉末材料、硬质合金、精密切削工具等钨系列产品的研发、生产，以及行业专业解决方案的提供，是知名的钨粉末、硬质合金及切削工具供应商。

凭借完整钨产业链的产品集成技术研发，以及求实创新的管理理念，厦门金鹭始终保持着强劲的发展势头，为全球用户提供高性价比的钨粉末产品和服务，为现代工业领域解决高硬度、耐高温、耐磨损问题，提供了优良的产品和完善的解决方案，客户遍布全球，享誉海内外。

公司现有员工 3000 多名，拥有 5 个生产基地，4 个境外销售公司和 1 个企业技术中心，独立承担并完成多项“国家科技支撑计划项目”，“国家科技重大专项”，“国家火炬计划项目”，“国家重点新产品”开发项目及省市重点研究课题，被评为“战略性新兴产业骨干企业”、“创新型企业”、“先进技术企业”；荣获包括国家科技进步二等奖等多项专利与奖项；切削工具累计获得发明专利、实用新型专利及外观专利等 400 多项。

Xiamen Golden Egret Special Alloy Co. Ltd., established in 1989, is a Sino-foreign joint venture state-level high-tech enterprise and a key member of the state-owned listed company Xiamen Tungsten Co., Ltd.The company is committed to the research and development and production of high-quality tungsten powder materials, cemented carbide, precision cutting tools and other tungsten products, as well as the provision of professional solutions in the industry. It is a well-known supplier of tungsten powder, cemented carbide and cutting tools.

With the product integration technology research and development of the complete tungsten industry chain, as well as the realistic and innovative management concept, Golden Egret has always maintained a strong development momentum, providing cost-effective tungsten powder products and services for global users, and solving high hardness, resistance to High temperature, wear resistance, provide excellent products and perfect solutions, customers all over the world, well-known at home and abroad.

The company has more than 3,000 employees, 5 production bases, 4 overseas sales companies and 1 enterprise technology center. Planning Project", "National Key New Product" development project and provincial and municipal key research topics, and was rated as "Strategic Emerging Industry Backbone Enterprise", "Innovative Enterprise", "Advanced Technology Enterprise"; won the first prize including National Science and Technology Progress Award, the second prize of National Science and Technology Progress Award and many other patents and awards; cutting tools have obtained more than 400 invention patents, utility model patents and appearance patents.

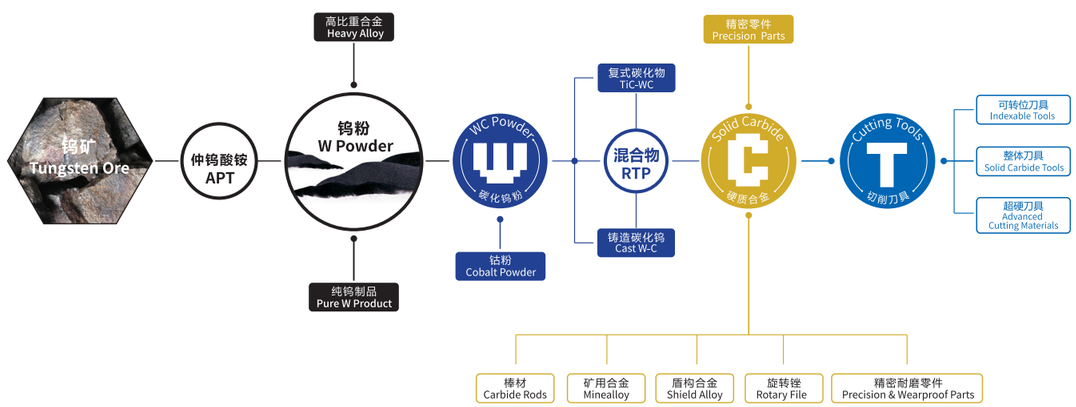

目录
Contents

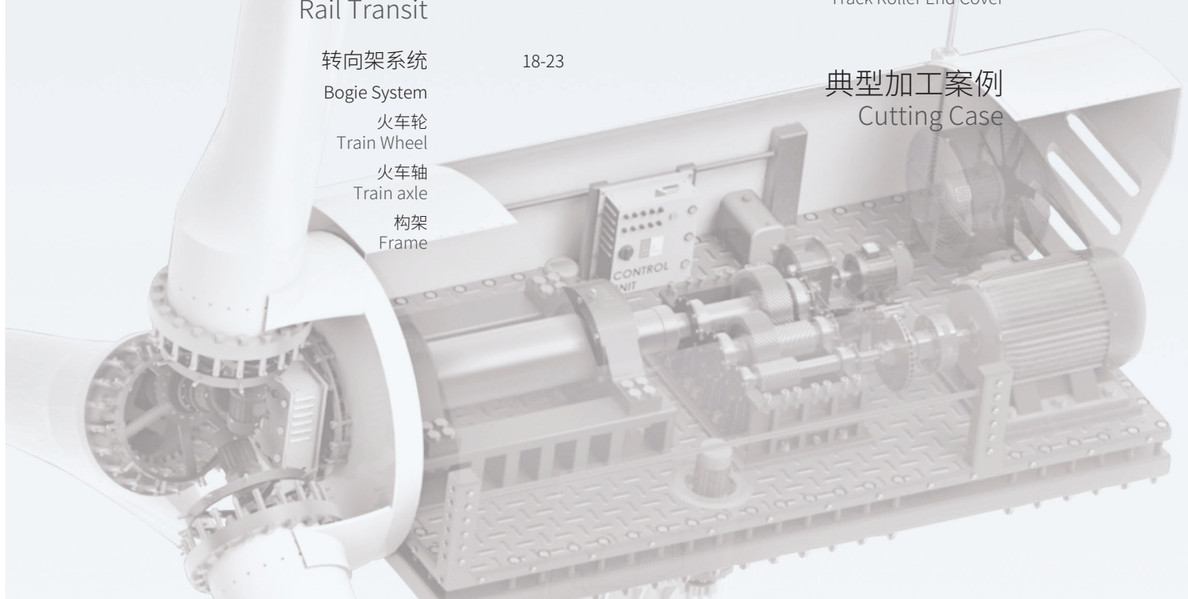

风电行业加工解决方案

Manufacturing Solutions for Wind Power

轮毂
Hub

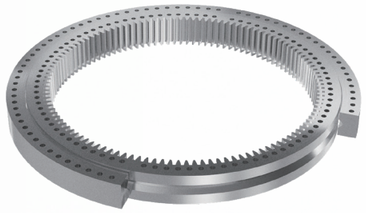

轴承
Bearing

叶片
Vane

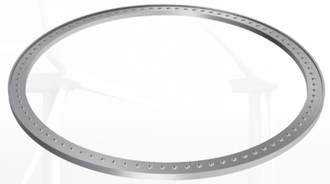

法兰
Flange

主轴
Main Shaft

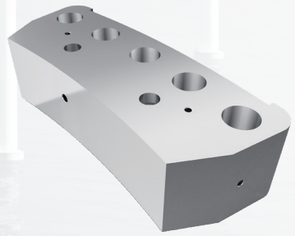

制动钳
Caliper

能源及重工行业加工解决方案 Manufacturing Solutions for Energy & Heavy Industry

连接面粗铣加工
Rough Milling of Connecting Surface

- **HNKU09+MFC145**

高经济多功能面铣
Multi-function Face Milling With High Cost-effective

双面12刃面铣刀，经济性高；设计有多个主偏角，满足不同工况需求
Double-sided 12-edge face milling, high economy. The design has multiple main deflection angles to meet the requirements of different working conditions.

连接面精铣加工
Finishing Milling of Connecting Surface

- **ANKX16+MEC190**

负型曲线刃方肩铣
Square Shoulder Milling With Negative Curve Edge

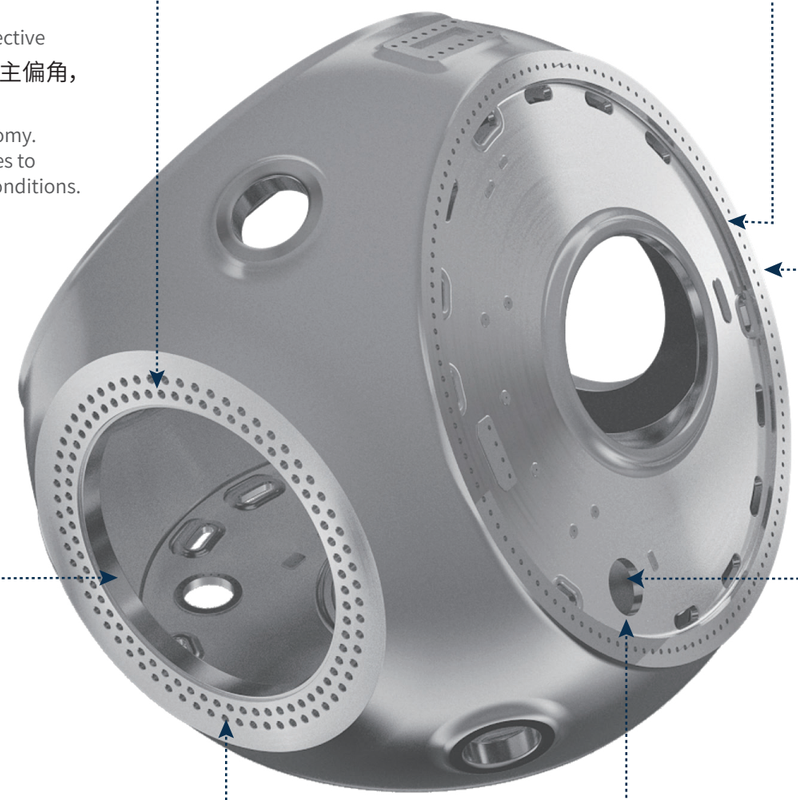

连接面钻孔加工
Drill of Connecting Surface

- **QPMG+GHDS**

高效率浅孔钻
High-efficiency Indexable Shallow Drilling

连接面侧壁粗铣加工
Rough Milling of Connecting Surface Side Walls

- **ANKX16+MHC190**

高效率玉米铣
High-efficiency Corn Milling

电机孔镗削加工
Boring of Mounting Hole

- **LRB/LFB**

高精度镗削系统
Precision Boring Series

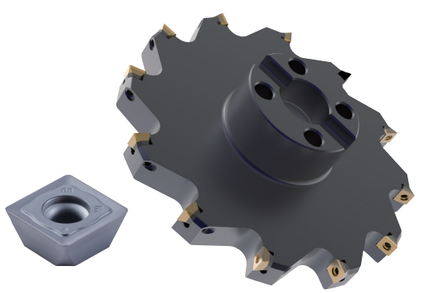

连接面反铣加工
Back Milling of Connecting Surface

- **SDMT12-EGM+订制刀盘**

多功能铣削刀具
Multi-function Milling Tool

电机孔螺旋插补铣加工
Machining Screw Insert and Milling Motor

- **RCMT20+MPC100**

高精密仿形铣
High Precision Profile Milling

连接面钻孔加工
Drill of Connecting Surface

- **QPMG+GHDS**

高效率浅孔钻
High-efficiency Indexable Shallow Drilling

连接面铣削加工
Milling of Connecting Surface

- **SNE(M)U12+MFB245**

双面通用面铣
General Double Side Face Milling Tool

外圆去黑皮
Cylindrical Turning to Remove Large Allowances

- SNMM25+PY1

负型单面重载车削
Negative Single Side Heavy-duty Turning

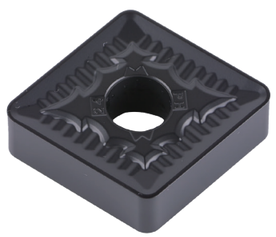

外圆粗车加工
Rough Cylindrical Turning

- SNMM25+PH

负型单面重载车削
Negative Single Side Heavy-duty Turning

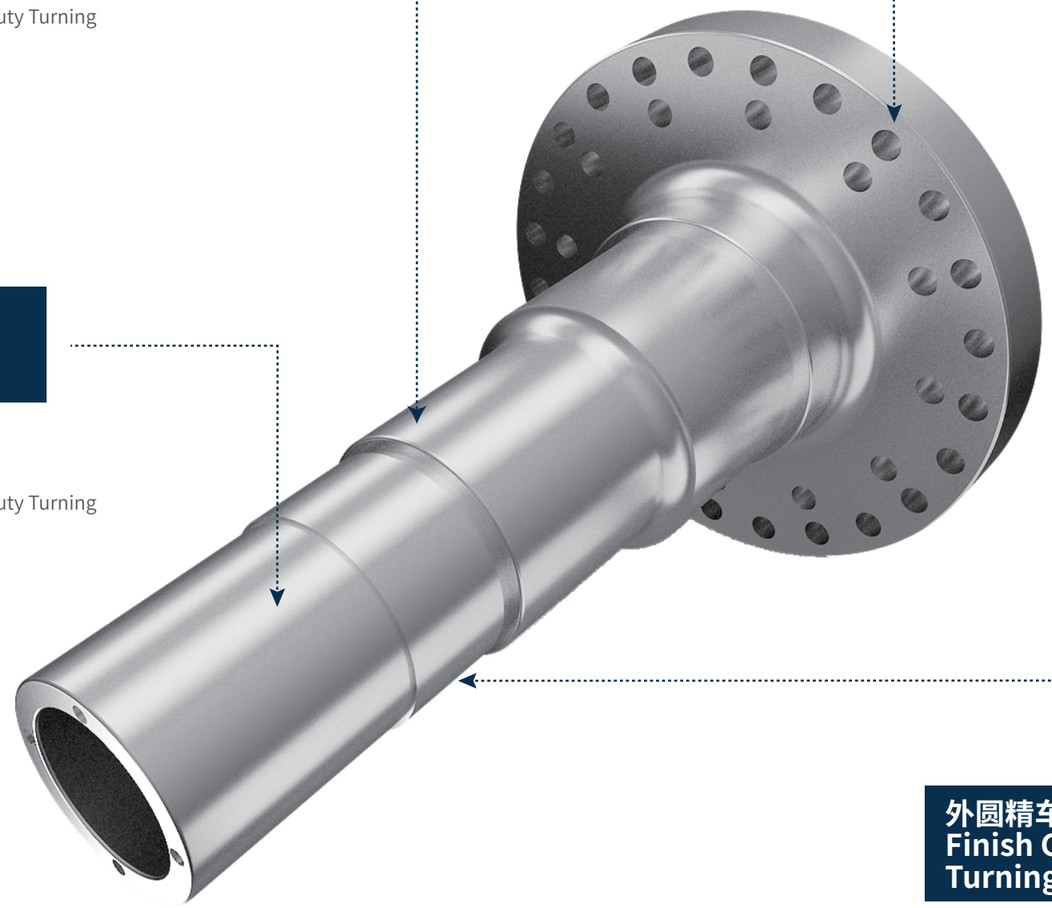

法兰盘连接孔加工
Drilling of Flange Connection Hole

- QPMG+GHDS

高效率浅孔钻
High-efficiency Indexable Shallow Drilling

外圆精车加工
Finish Cylindrical Turning

- CNMG19+PM

双面负型车削
Double Side Negative Turning

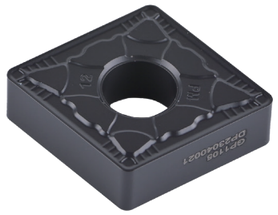

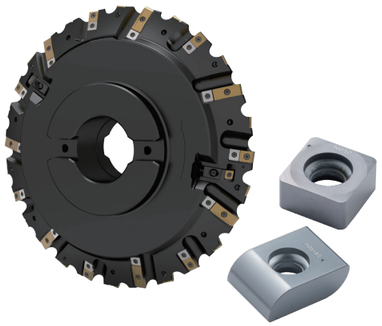

内齿圈齿轮铣削加工
Milling of Internal Ring Gear

- **LNE系列齿轮铣刀片**
  高精度非标齿轮铣刀
  High-procision Gear Milling Insert

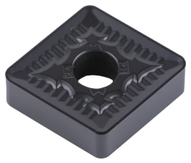

外圆去黑皮
Cylindrical Turning to Remove Large Allowances the Oxide Scale

- **SNMM25+PH**
  负型单面重载车削
  Negative Single Side Heavy-duty Turning

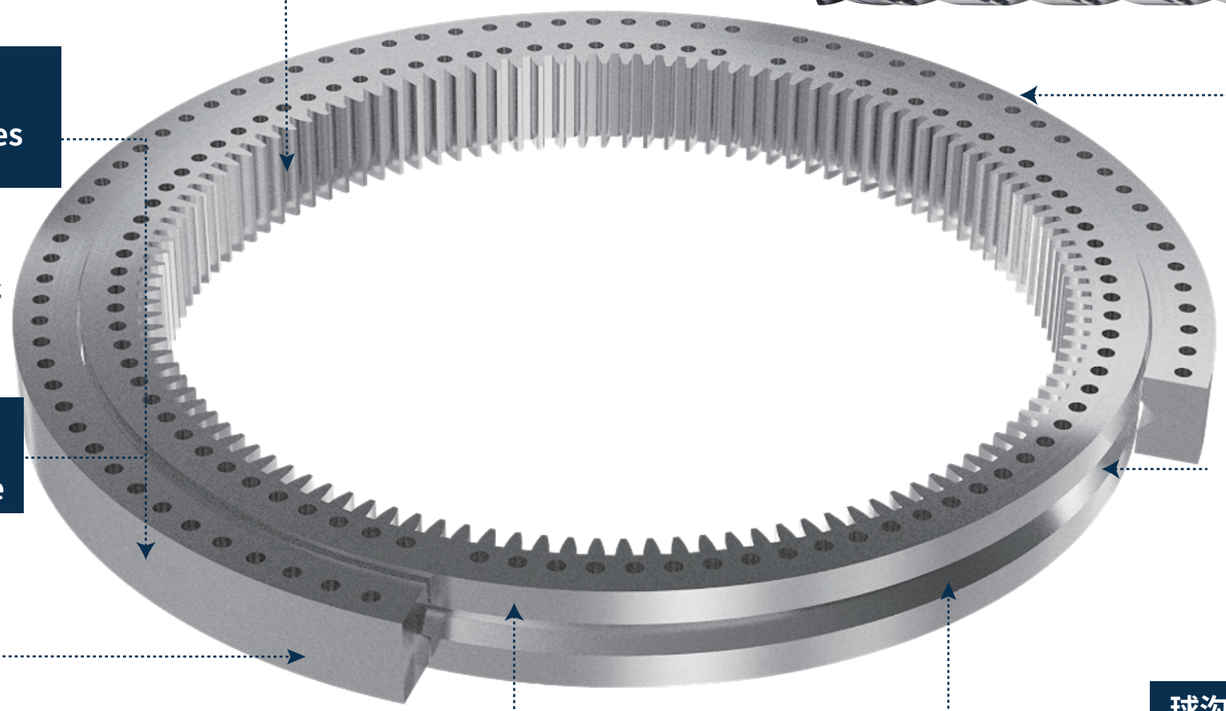

孔加工
Hole Making

- **D938深孔钻**
  深孔内冷麻花钻
  Deep-hole Inner Cooling Twist Drill

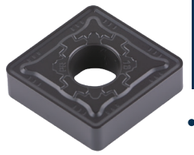

外圆粗车加工
Rough Cylindrical Turning External Surface

- **CNMG19+PR**
  负型粗车
  Negative Rough Turning

球沟道粗加工
Rough Machining of Ball Channel

- **RCMX16+RR**
  粗车刀片
  Rough Turning Insert

外圆精车加工
Finishing the External Surface

- **TNMG16+QF**
  高精度车削刀片
  High-precision Turning Inserts

密封槽加工
Turning the Sealing Groove

- **GTD-MG**
  GTD系列槽刀
  Grooving Inserts of GTD Series

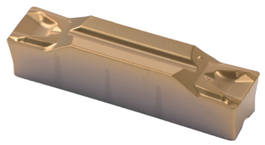

球沟道硬车精加工
Turning Finish of Ball Channel

- **RCGN**
  高耐磨性CBN刀具
  High Wear Resistance CBN Tool

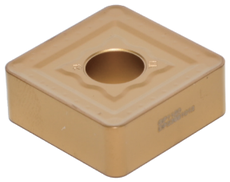

外圆粗车加工
Rough Cylindrical Turning

- SNMM25+MR

  负型单面重载车削

  Negative Single Side Heavy-duty Turning

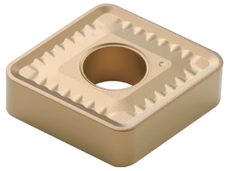

外圆半精车削加工
Semi-Finish Cylindrical Turning

- CNMM19+BH

  负型单面粗车削

  Negative Single Rough Turning

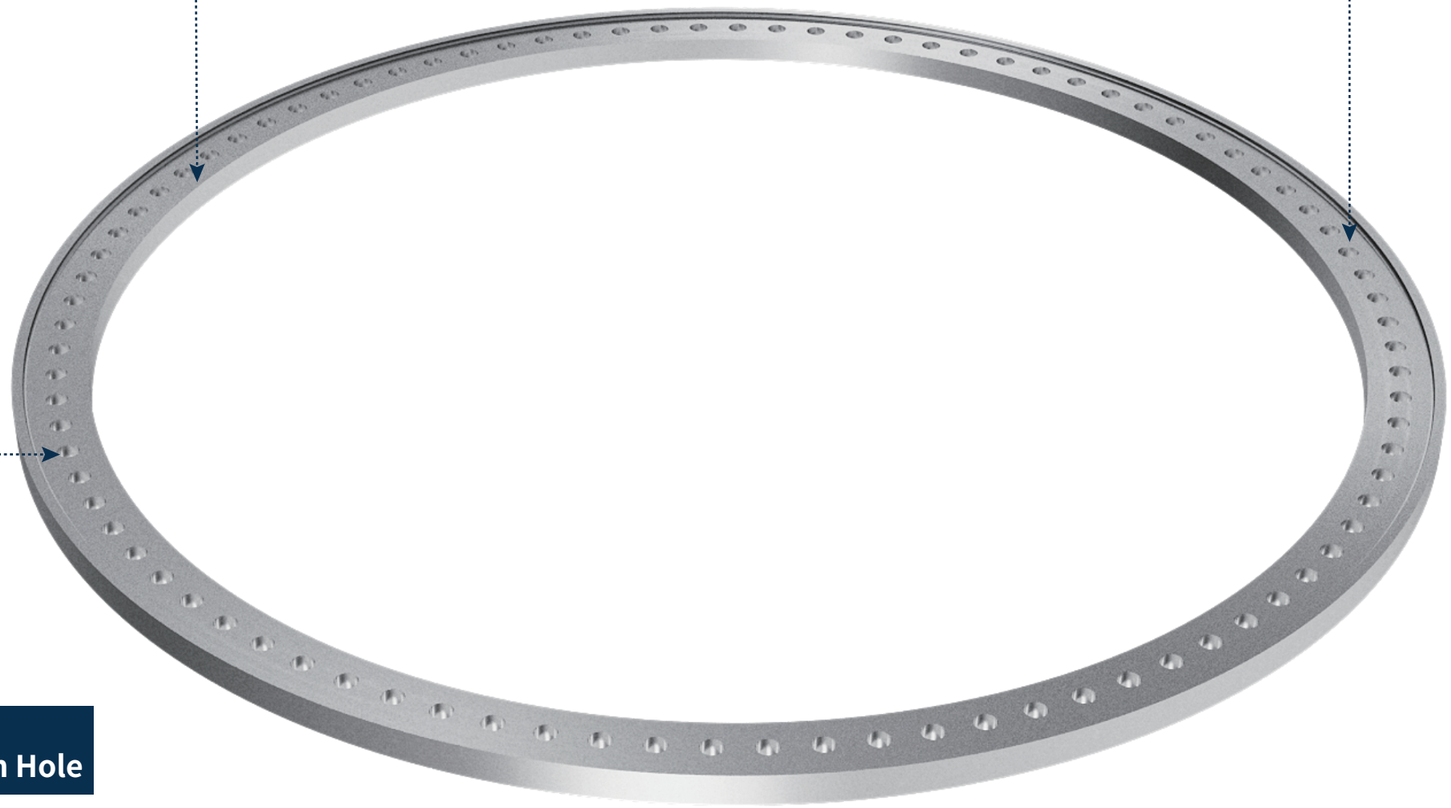

安装孔钻孔加工
Drilling of Installation Hole

- QPMG+GHDS

  高效率浅孔钻

  High-efficiency Indexable Shallow Drilling

端面粗铣加工
Rough Face Milling

- SDMT+MKB113

单面4刃快进给铣刀
Single Side 4-edge Fast Feed Milling Cutter

端面精铣加工
Finish Face Milling

- SNE(M)U12+MFB245

双面通用面铣
General Double Side Face Milling Tool

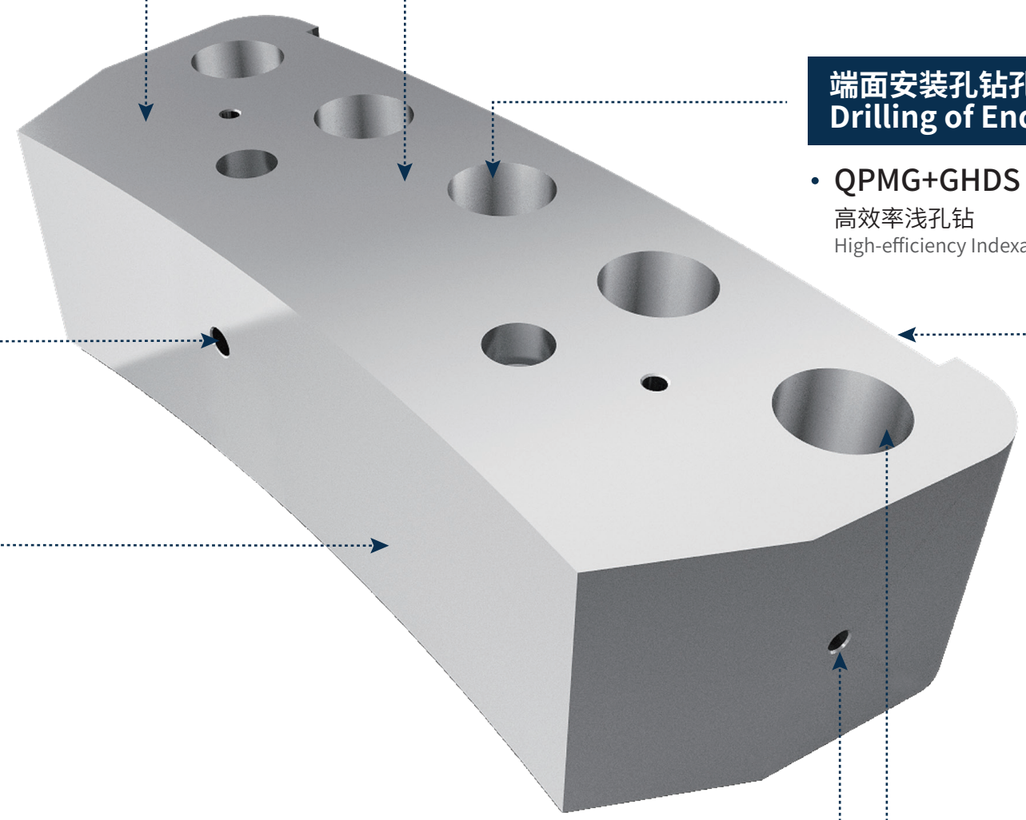

侧壁钻孔加工
Sidewall Drilling

- D918S

高性能钢用麻花钻
High-efficiency Solid Carbide Twist Drill For Steel

端面安装孔钻孔加工
Drilling of End Face Mounting Hole

- QPMG+GHDS

高效率浅孔钻
High-efficiency Indexable Shallow Drilling

侧壁粗铣加工
Rough Milling of Side Wall

- LNMX+MKF115

双面4刃快进给铣刀
Double Side 4-edge Fast Feed Milling Cutter

侧壁凹面铣削加工
Side Wall Concave Milling

- PP300-SPEED

高效加工摆线铣刀
High-efficiency Endmill For Trochoidal Processing
实现大切深、小切宽的高效稳定加工，兼具高抗崩性和高耐磨性
It can achieve high efficiency and stable processing of large cutting depth and small cutting width, and has high collapse resistance and high wear resistance

安装孔镗削加工
Boring of Mounting Hole

- RB/FB

高精度镗削系统
High Precision Boring Series

侧壁深孔钻孔加工
Side Wall Deep Hole Drilling

- D938深孔钻

深孔内冷麻花钻
Deep-hole Inner Cooling Twist Drill

轨道交通行业解决方案

Manufacturing Solutions for Rail Transit

火车轮
Train Wheel

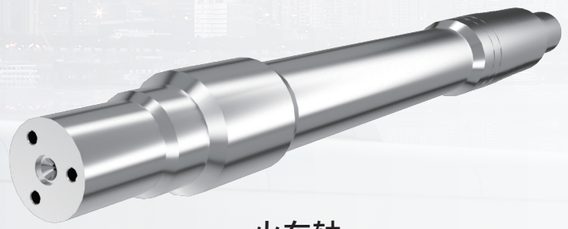

火车轴
Train axle

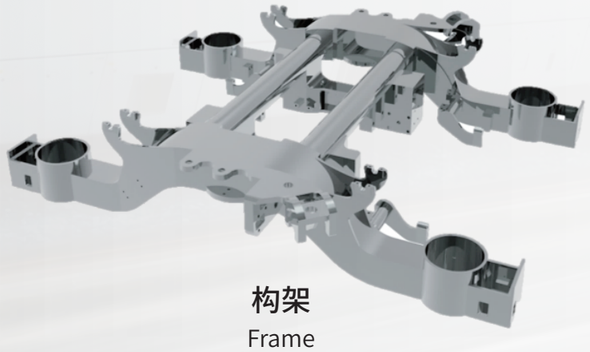

构架
Frame

能源及重工行业加工解决方案 Manufacturing Solutions for Energy & Heavy Industry

辐板及轮缘粗精加工
Roughing and finishing process of spoke plates and rims

- RCMX25/32-RR

正型粗车刀片
Positive Rough Turning Insert

车轮轴孔加工
Hole-making for Wheel Axle

- SNMM25+PH

负型单面重载车削加工
Negative Single Side Heavy-duty Turning

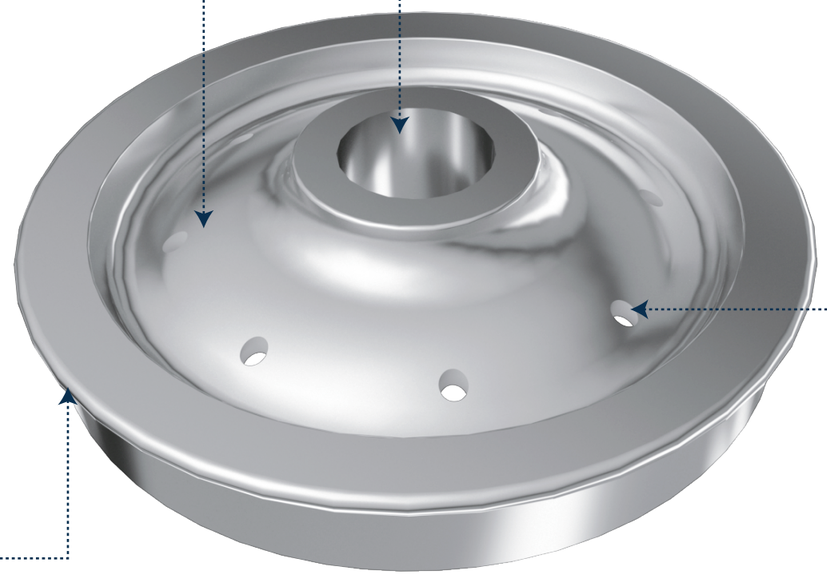

轮缘及踏面修复
Wheel rim and tread repair

- LNMX19/30-HM

火车轮修复刀片
Insert For Re-turning Rail Wheel

辐板孔加工
Spoke Plates Hole-making

- QPMG系列+GHDS

高效率浅孔钻
High-efficiency Indexable Shallow Drilling

外圆粗车加工
Rough Cylindrical Turning

- SNMM25-PY1

负型单面重载车削
Negative Single Side Heavy-duty Turning

外圆半精车削加工
Semi-finish Cylindrical Turning

- DNMG11-QM

双面负型车削
Double Side Negative Turning

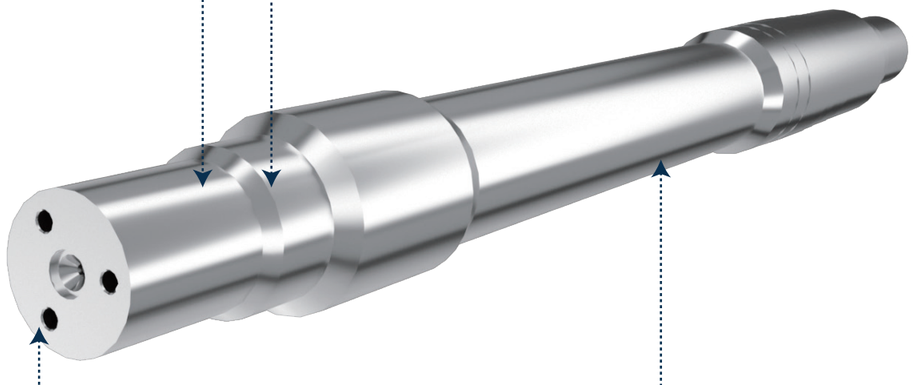

端面粗铣
Face Rough Milling

- HNKU09+MFC145刀体

高经济多功能面铣
Multi-function Face Milling with High Cost-effective

端面螺纹底孔加工
End Face Threaded Bottom Hole-making

- GUMD系列+GUMD刀体

高效率皇冠钻
High-efficiency Modular Drill

外圆精车加工
Finish Cylindrical Turning

- VCMT16-GP

通用正型刀片
General Positive Turning Insert

侧壁粗铣加工
Rough Milling of Side Walls

- **ADGT16+MET190系列**
  高效率玉米铣
  High-efficiency Corn Milling

端面粗铣
Rough Face Milling

- **SNMU16+MFB245**
  中载通用型负型面铣
  Medium-load Negative Face Milling

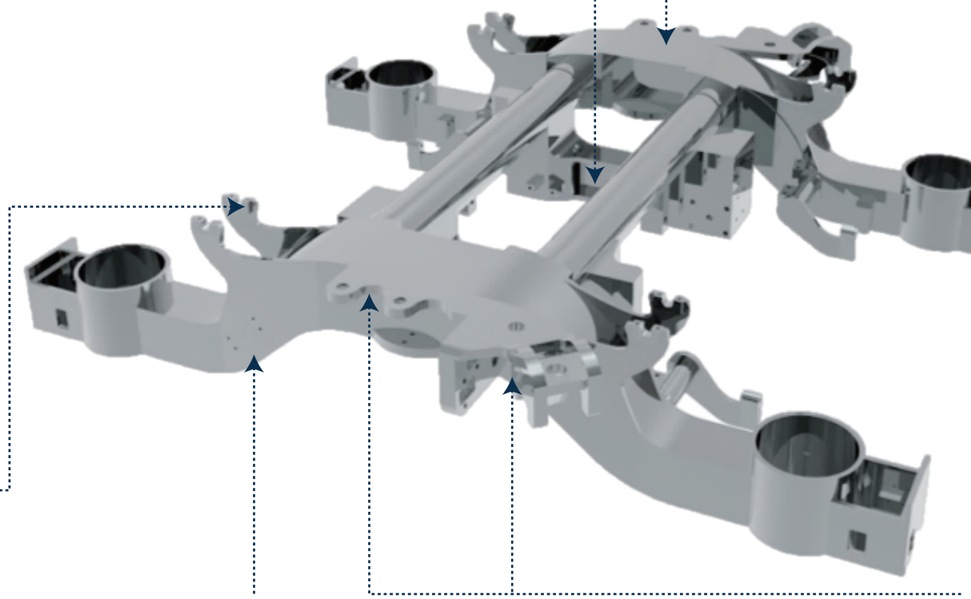

弹簧型腔加工
Spring Pocket Milling

- **SXMT+客制化刀盘**
  反铣三面刃
  Reverse Milling Tool with Three-sided Cutting Edge

制动连接孔
Brake Connection Hole

- **D918S**
  高性能钢用麻花钻
  High-efficiency Solid Carbide Twist Drill for Steel

侧壁铣削
Side Wall Milling

- **SP210系列铣刀**
  高效加工立铣刀
  High-efficiency Endmill

工程机械加工解决方案

Manufacturing Solutions for Construction Machinery

动臂&斗杆
Boom & Arm

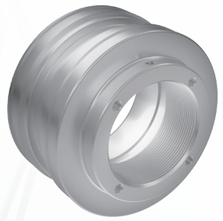

活塞
Piston Head

链轨节
Chain Rail Joint

液压油缸缸筒
Hydraulic Cylinder

转台
Rotary Table

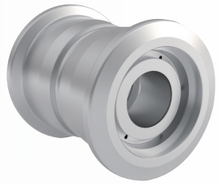

支重轮
Track Roller

活塞杆
Piston Rod

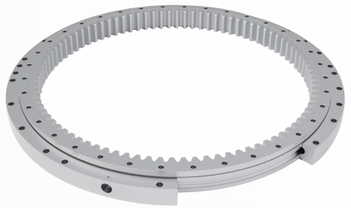

回转支承
Ring

支重轮端盖
Track Roller End Cover

精镗安装孔
Finish Boring of Mounting Hole

- GBR-FB+TCMT11

高精度镗削系统
Precision Finish Boring Series

粗镗安装孔
Rough Boring of Mounting Hole

- GBR-RB+CCMT12

高效粗镗系统
Efficient Rough Boring Series

反铣内端面
Back Milling of Inner Face

- SDMT12-EGM+订制刀盘

多功能铣削刀具
Multi-function Milling Tool

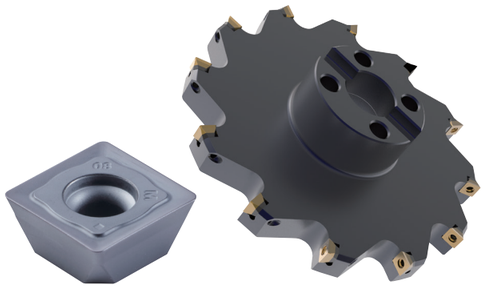

端面铣削
Face Milling

- SNMU16+MFB245

中载通用型负型面铣
Medium-load Negative Face Milling

刮辊刀-液压结构
Combined Skiving/Roller Burnishing: Hydraulic type

- **TPMT19-BD**
  粗刮刀片
  Rough Skiving Insert
- **LNEF08-EPM**
  精刮刀片
  Finish Skiving Insert


刮辊刀-气动结构
Combined Skiving/Roller Burnishing: Pneumatic type

- **LNEF17-PL/PF1**
  精刮刀片
  Finish Skiving Insert
- **LNEF12-PL**
  精刮刀片
  Finish Skiving Insert
- **LNEF10-PL**
  精刮刀片
  Finish Skiving Insert

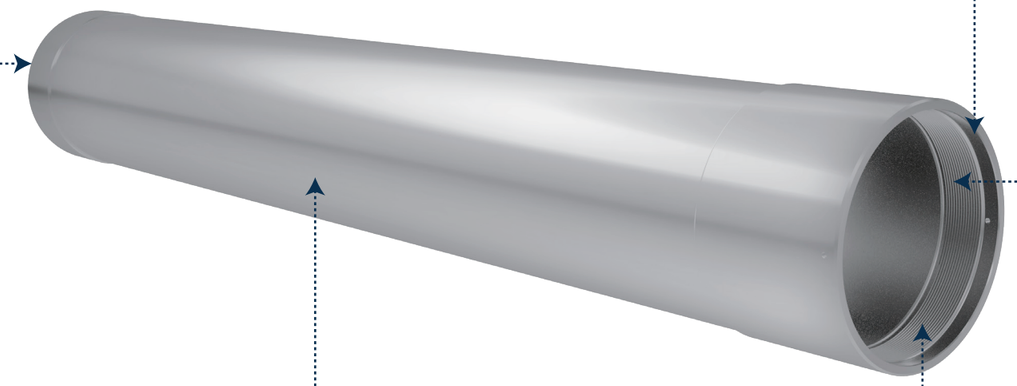

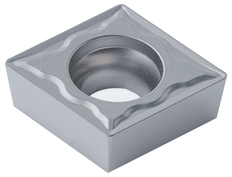

内圆车削加工
Internal Turning

- **CCMT12-GP**
  钢材高效车削刀具
  High-efficiency Turning Tool for Steel

切槽加工
Grooving

- **GTD20-FT**
  GTD系列槽刀
  Grooving Inserts of GTD Series

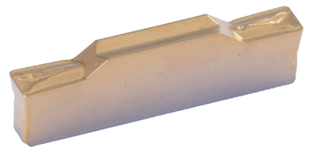

外圆车削
Cylindrical Turning

- **CNMG12-PM**
  钢材高效车削刀具
  High-efficiency Turning Tool for Steel

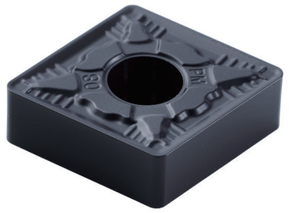

螺纹加工
Machining of Thread

- **16IR**
  螺纹车削ISO60°
  Thread Turning ISO 60°

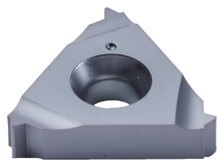

外圆粗车
Rough Cylindrical Turning

- SNMG15-QM

负型粗车
Negative Rough Turning

外圆精车
Finish Cylindrical Turning

- CNMG16-PM

钢材高效车削刀具
High-efficiency Turning Tool for Steel

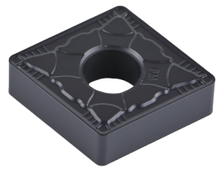

仿形车削
Copying Turning

- VCMT16-GP

通用正型刀片
Positive Turning Insert

台阶面粗车
Rough Turning of The Stepped Surface

- CNMG16-PM

钢材高效车削刀具
High-efficiency Turning Tool for Steel

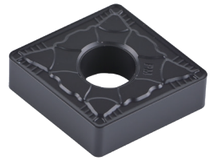

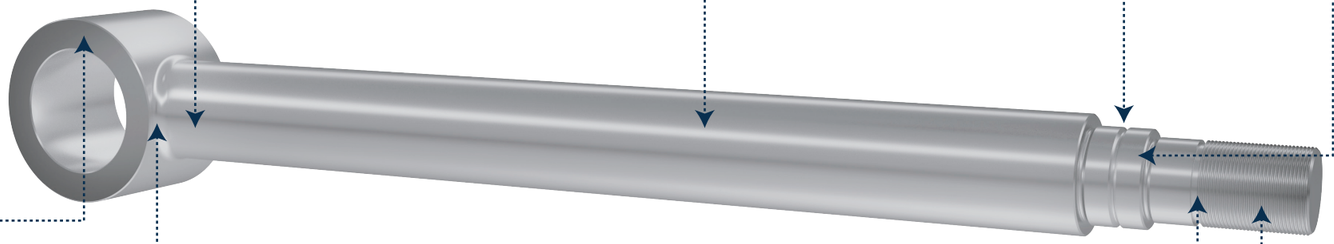

台阶面精车
Finish Turning of The Stepped Surface

- DNMG15-PM

钢材高效车削刀具
High-efficiency Turning Tool for Steel

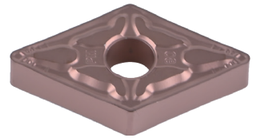

端面铣削
Face Milling

- HNKU09-GM+MFC145

高经济多功能面铣
Multi-function Face Milling with High Cost-effective

圆弧粗加工
Rough Turning of Circular Arcs

- RCMX20-RR

粗车刀片
Rough Turning Insert

切槽加工
Grooving

- GTD20-MT

GTD系列槽刀
Grooving Inserts of GTD Series

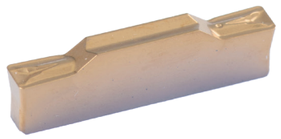

螺纹加工
Machining of Thread

- 16IR-TC

螺纹刀片
Thread Turning Insert

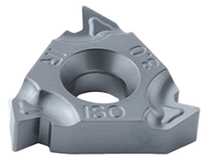

外圆车削
Rough Cylindrical Turning

- CNMG12-PM

钢材高效车削刀具
High-efficiency Turning Tool for Steel

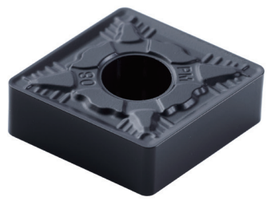

螺纹加工
Machining of Thread

- 16IR-TC

螺纹刀片
Thread Turning Insert

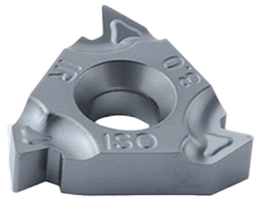

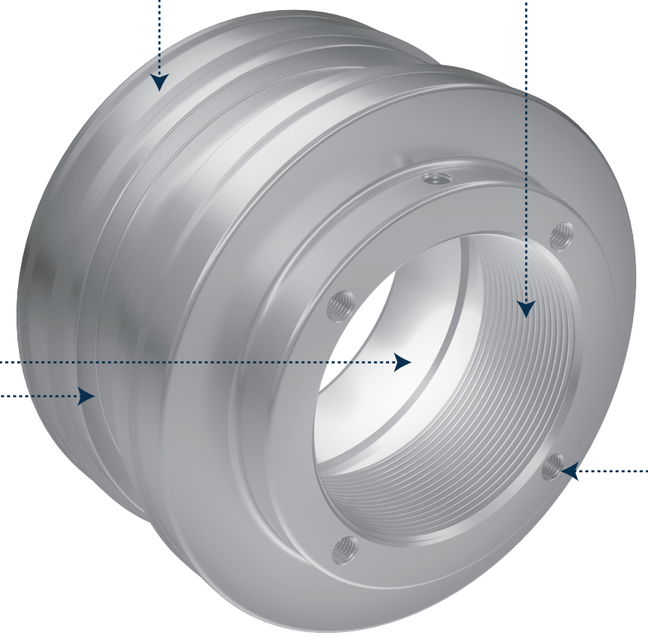

内孔车削
Turning of Inner Holes

- CCMT09-GP

通用正型刀片
Positive Turning Insert

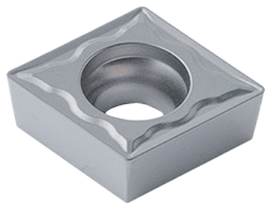

螺纹底孔加工
Drilling of Screw Thread Bottom Hole

- QPMG-DP+GHDS

高效率浅孔钻
High-efficiency Indexable Shallow Drilling

- D938系列

普通钢加工硬质合金麻花钻
Solid Carbide Twist Drill for Steel

切槽加工
Grooving

- GTD-OT

GTD系列槽刀
Grooving Inserts of GTD Series

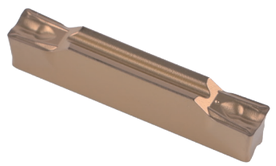

反铣内端面
Back Milling of Inner Face

- SDMT12-EGM

多功能铣削刀具
Multi-function Milling Tool

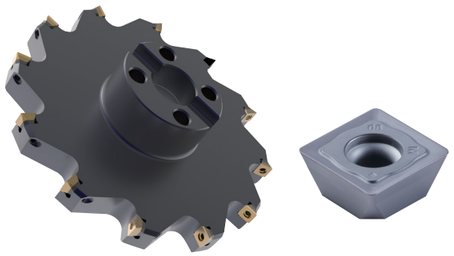

端面粗铣
Rough Face Milling

- SNMU16+MFB245

中载通用型负型面铣
Medium-load Negative Face Milling

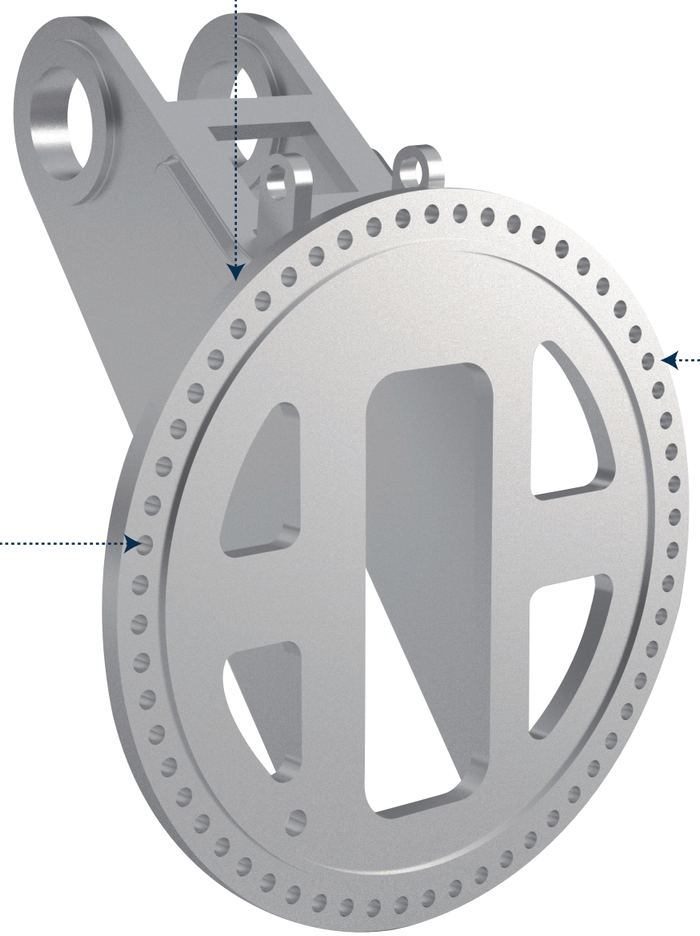

端面孔加工
Drilling of End Face Hole

- QPMG+GHDS

高效率浅孔钻
High-efficiency Indexable Shallow Drilling

端面精铣
Finish Face Milling

- SNEU12-GM+MFB288

双面通用面铣
General Double Side Face Milling Tool

安装孔加工
Drilling of Screw Thread Bottom Hole

- **QPMG+GHDS**
  高效率浅孔钻
  High-efficiency Indexable Shallow Drilling

- **D918S系列**
  高性能钢用麻花钻
  High-efficiency Solid Carbide Twist Drill for Steel

齿轮加工
Gear Machining

- **非标铣轮刀具**
  高精度非标齿轮铣刀
  High-precision Gear Milling Tool

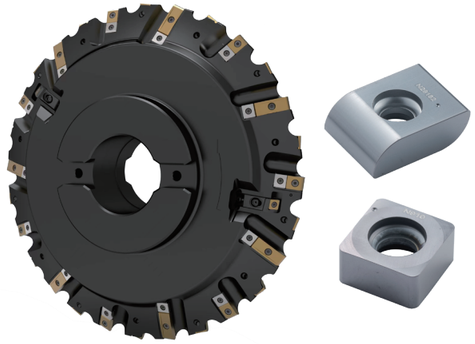

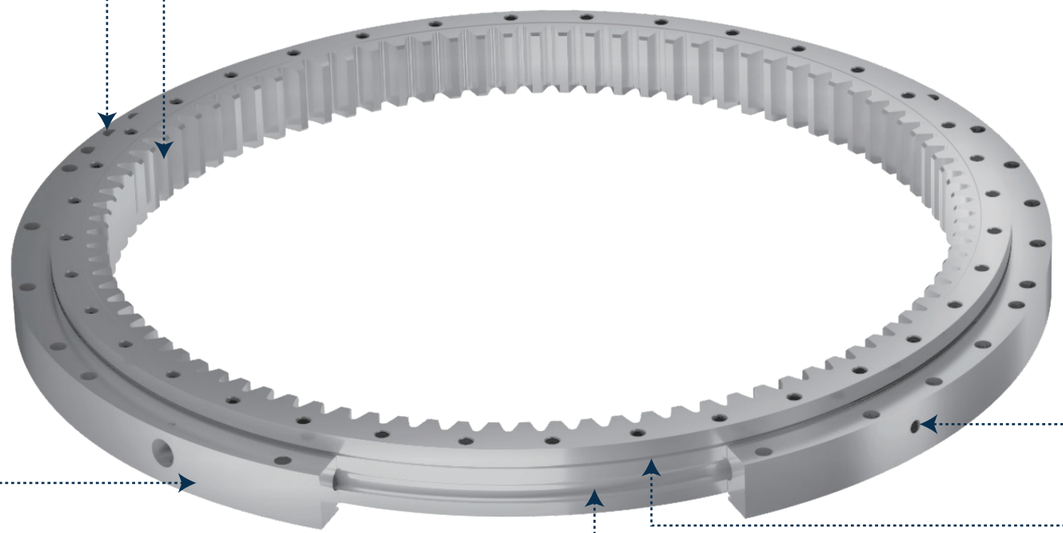

油孔加工
Oil-hole Machining

- **D938深孔钻**
  深孔内冷麻花钻
  Deep-hole Inner Cooling Twist Drill

密封槽加工
Turning the Sealing Groove

- **GTD-MG**
  GTD系列槽刀
  Grooving Inserts of GTD Series

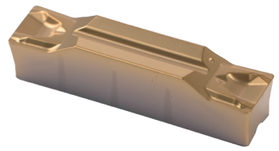

粗车
Rough Turning

- **CNMG19+PR**
  双面负型车削
  Double Side Negative Turning

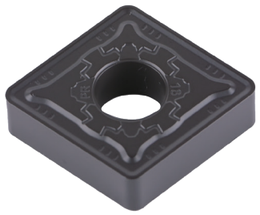

精车
Finish Turning

- **CNMG16+PR**
  双面负型车削
  Double Side Negative Turning

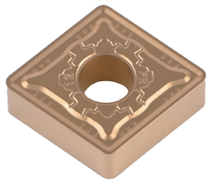

球沟道粗车
Rough Turning of Ball Channel

- **RCMX160600-RR**
  粗车刀片
  Rough Turning Insert

球沟道精车
Finish Turning of Ball Channel

- **RCGN12**
  高耐磨性CBN刀具
  High Wear Resistance CBN Tool

侧面孔加工
Drilling of Side Face Hole

- QPMG+GHDS

高效率浅孔钻
High-efficiency Indexable Shallow Drilling

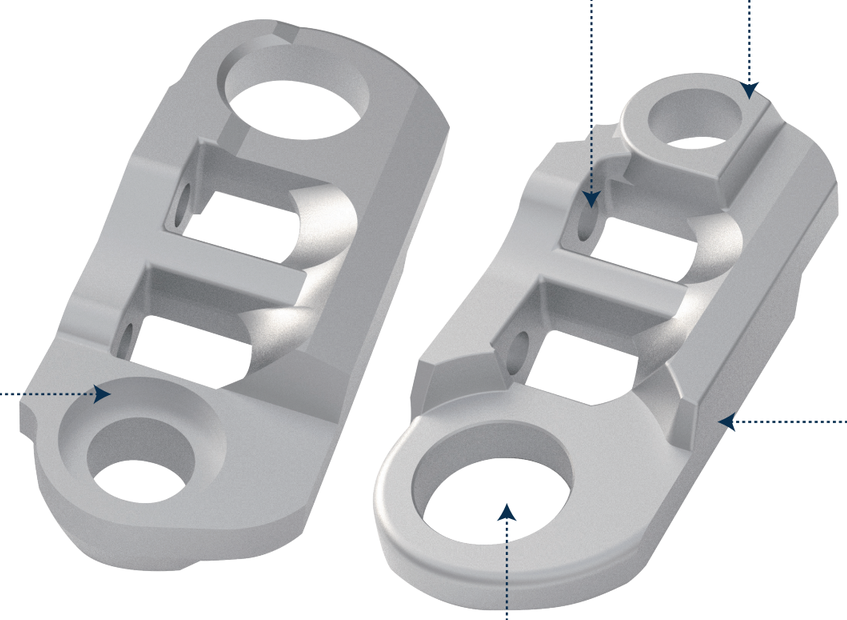

端面铣削
Face Milling

- HNKU09-GM+MFC145

高经济多功能面铣
Multi-function Face Milling with High Cost Effective

台阶面锪孔
Spot Facing on Step Surface

- TCMT16-MM

通用正型轻切削
Positive Turning Insert for Light Cutting of General Materials

侧面铣削
Side Face Milling

- SNMU12-GM+MFB245

双面通用面铣
General Double Side Face Milling Tool

内孔加工
Boring of Internal Hole

- SCMT09-GP

通用正型轻切削
Positive Turning Insert for Light Cutting of General Materials

孔加工
Drilling

- **D938系列**
  普通钢加工硬质合金麻花钻
  Solid Carbide Twist Drill for Steel

孔加工
Drilling

- **D938深孔钻**
  深孔内冷麻花钻
  Deep-hole Inner Cooling Twist Drill

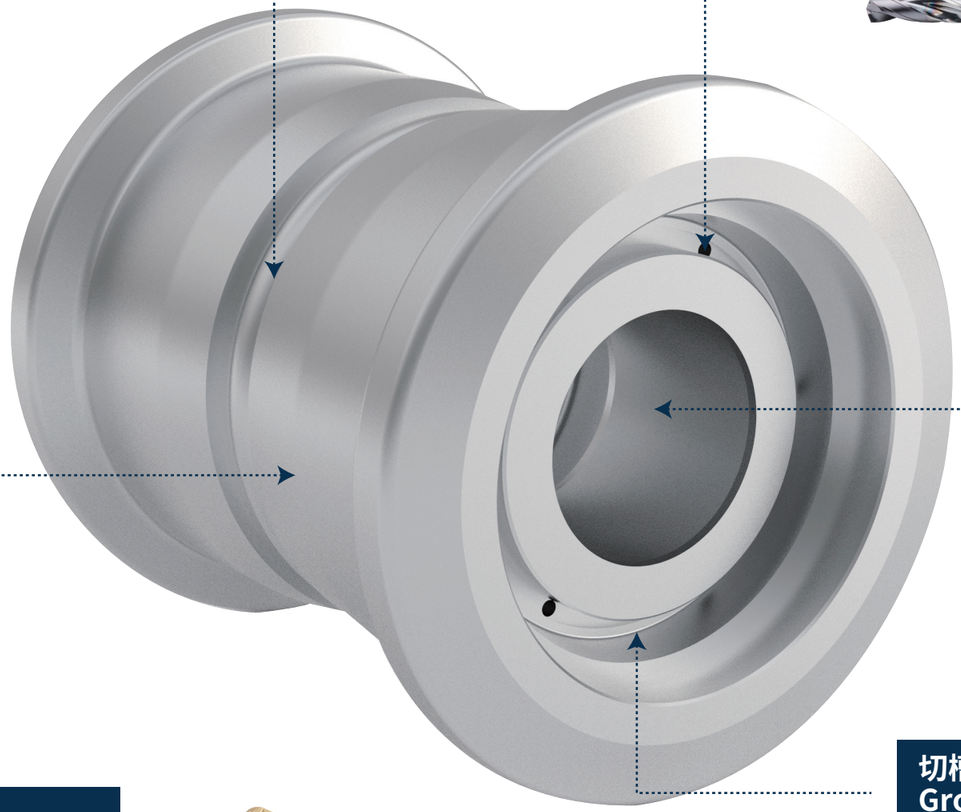

端面及外圆粗车
Rough Cylindrical and Face Turning

- **CNMG12-PM**
  钢材高效车削刀具
  High-efficiency Turning Tool for Steel

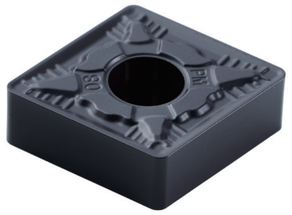

内孔车削
Turning of Internal Hole

- **CNMG12-QM**
  钢材高效车削刀具
  High-efficiency Turning Tool for Steel

端面及外圆精车
Finish Turning of Outer Circle and End Face

- **CNMG12-QF**
  钢材高效车削刀具
  High-efficiency Turning Tool for Steel

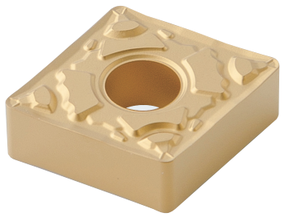

切槽加工
Grooving

- **GZD6010-MR**
  非标切槽刀具
  Non-standard Grooving Cutter

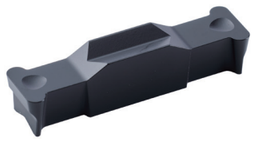

- **GTD60-FT**
  GTD系列槽刀
  Grooving Inserts of GTD Series

粗车
Rough Turning

- **CNMA12**
  平板铸铁车削刀具
  Flat-top for Cast Iron Used

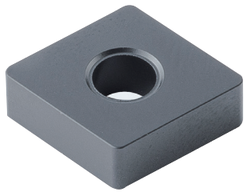

切槽加工
Grooving

- **GTD60-MT**
  GTD系列槽刀
  Grooving Inserts of GTD Series

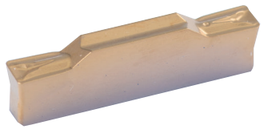

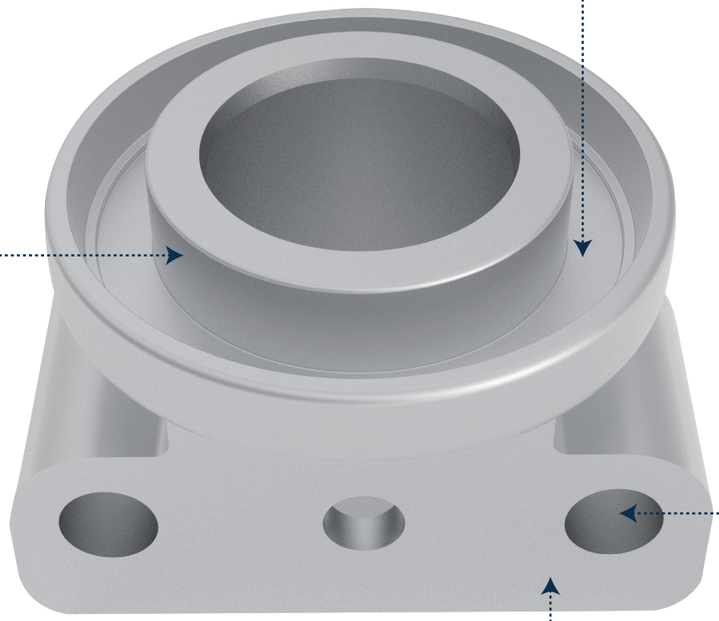

精车
Finish Turning

- **CNMG12-MK**
  铸铁高效车削刀具
  High-efficiency Turning Tool for Cast Iron

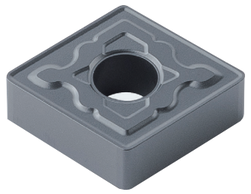

孔加工
Drilling

- **QPMG+GHDS**
  高效率浅孔钻
  High-efficiency Indexable Hole Drilling

侧面铣削
Side Face Milling

- **SNMU12-GM+MFB288**
  双面通用面铣
  General Double Side Face Milling Tool

案例1：变桨系统-轮毂
Case1：Pitch system-Hub

加工方式 Processing Methods	平面铣削-粗加工 Face Milling-Roughing
刀片型号 Indexable Inserts	HNGU0905ANEN-GH-GM2140
刀体 Cutter Holder	MFC145160R12C40HN09HA
加工材料 Workpiece	QT600
切削速度 Cuting Speed	Vc=251m/min
进给速度 Feed	fz=0.75mm/rev
切深量 Cutting Depth	ap1=3mm, ap2=2mm
加工设备 Equipment	卧式铣床 Horizontal milling machine
冷却方式 Cooling Method	乳化液，外冷 emulsion,external cooling
切削效果 Processing Result	寿命超过客户要求 The service life exceeds the customer's requirements

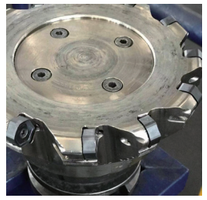


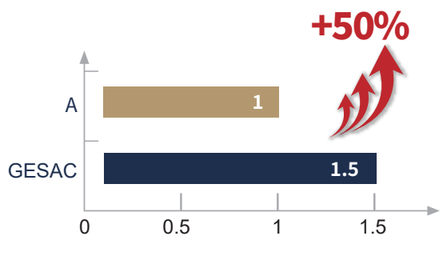

案例2：变桨系统-轮毂
Case2：Pitch system-Hub

加工方式 Processing Methods	连接面粗铣及电机孔螺旋插补铣 Connecting rough milling and motor hole spiral interpolation milling
刀片型号 Indexable Inserts	RCMT2006M0-EM-GM2140A
刀体 Cutter Holder	非标刀盘：D220,8齿 Non standard cutterhead: D220, 8 teeth
加工材料 Workpiece	QT500
切削速度 Cuting Speed	Vc=276m/min
进给速度 Feed	Fz=0.75mm/z
切深量 Cutting Depth	Ap=4mm
加工设备 Equipment	卧式铣床 Horizontal milling machine
冷却方式 Cooling Method	乳化液，外冷 Emulsion,external cooling
切削效果 Processing Result	抗崩性良好，寿命提升1倍 Good anti collapse performance, doubled lifespan


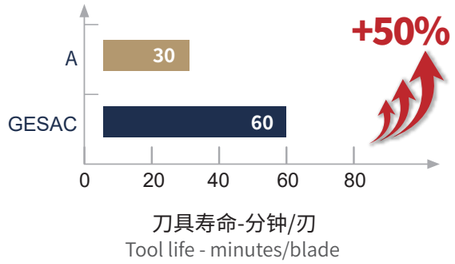

案例3：变桨系统-轮毂
Case3：Pitch system-Hub

加工方式 Processing Methods	背铣 Back Milling
刀片型号 Indexable Inserts	SDMT120508-EGM-GM2140
刀体 Cutter Holder	非标定制刀体 Non-standard cutter holder
加工材料 Workpiece	QT600
切削速度 Cuting Speed	Vc=180m/min
进给速度 Feed	fz=0.2mm/rev
切深量 Cutting Depth	ap=1-1.5mm
加工设备 Equipment	卧式铣床 Horizontal milling machine
冷却方式 Cooling Method	干切 Dry cutting
切削效果 Processing Result	寿命满足客户要求 The service life can meet the customer's requirements


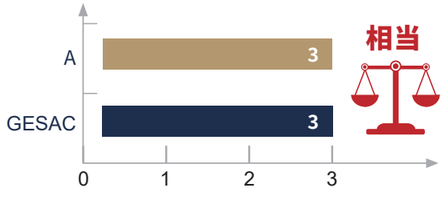

案例4：传动系统-主轴
Case4：Drive system-Main Shaft

加工方式 Processing Methods	扒皮粗车 Cylindrical Turning to Remove Large Allowances
刀片型号 Indexable Inserts	SNMM250924-PY1-GP1120
刀体 Cutter Holder	SBNR4040S2509
加工材料 Workpiece	42CrMo4/30CrNiMo8
切削速度 Cuting Speed	Vc=62-85m/min
进给速度 Feed	fn=0.8-1mm/rev
切深量 Cutting Depth	Ap=15-20mm
加工设备 Equipment	卧式车床 Horizontal lathe
冷却方式 Cooling Method	干切 Dry cutting
切削效果 Processing Result	断屑性能、寿命满足客户要求 The performance of chip-breaking and service life can meet the customer's requirements


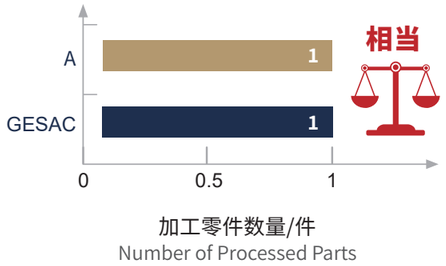

案例5：传动系统-主轴
Case5：Transmission System-Main Shaft

加工方式 Processing Methods	外圆车削 Cylindrical turning
刀片型号 Indexable Inserts	CNMM250924-PY-GP1105
刀体 Cutter Holder	PCBNR4040S2509
加工材料 Workpiece	QT500
切削速度 Cuting Speed	Vc=220-250m/min
进给速度 Feed	Fr=0.9-1.3mm/r
切深量 Cutting Depth	Ap=10-15mm
加工设备 Equipment	卧式铣床 Horizontal milling machine
冷却方式 Cooling Method	乳化液，外冷 emulsion,external cooling
切削效果 Processing Result	单个刃加工长度可加工2.5米，耐磨性良好 A single cutting edge can be machined up to 2.5 meters in length and has excellent wear resistance

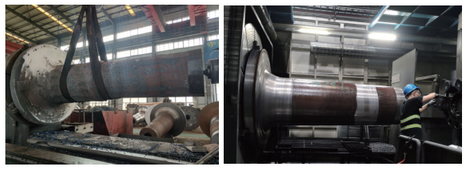

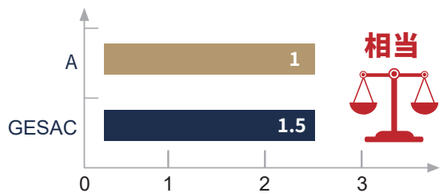

单个刃加工长度/米
Machining length per blade/m

案例6：固定系统-法兰
Case6：Fixation System-Flange

加工方式 Processing Methods	外圆车削+内圆车削+端面车削 External turning + Internal turning + Face turning
刀片型号 Indexable Inserts	SNMM250924-MR-GP1120
刀体 Cutter Holder	PSBNR4040S2509
加工材料 Workpiece	Q355
切削速度 Cuting Speed	Vc=194-213m/min
进给速度 Feed	Fr=0.7-1mm/r
切深量 Cutting Depth	Ap=10-13mm
加工设备 Equipment	大型双立柱车床 Large double-column lathe
冷却方式 Cooling Method	乳化液，外冷 Emulsion,external cooling
切削效果 Processing Result	适用大切深大进给工况，寿命提升10% Suitable for large depth of cut and large feed conditions, the service life is increased by 10%

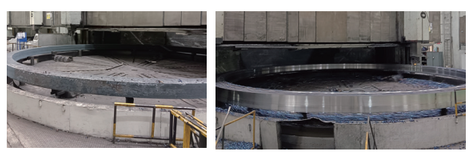

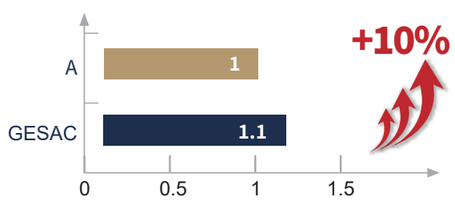

加工零件数量/件
Number of Processed Parts

案例7：液压系统-液压油缸缸筒
Case7: Hydraulic System-Hydraulic Cylinder

加工方式 Processing Methods	液压油缸刮辊粗加工 Rough skiving of Hydraulic Cylinder
刀片型号 Indexable Inserts	TPMT190616-BD-GP1105
刀体 Cutter Holder	D280专用刀体 Special cutter holder with D280
加工材料 Workpiece	25Mn焊接45钢, HRC20-30 The material welded from 25Mn and 45# steel, HRC20-30
切削速度 Cuting Speed	Vc=158m/min
进给速度 Feed	Fn=1.2mm/rev
切深量 Cutting Depth	Ap=0.5-1mm
加工设备 Equipment	专机 Special machine tool
冷却方式 Cooling Method	乳化液，外冷 emulsion, external cooling
切削效果 Processing Result	表面光洁度好，寿命满足客户要求 The quality of the machined surface is good, the service life can meet the customer's requirements

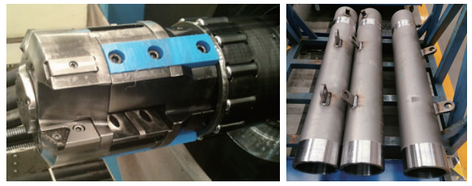

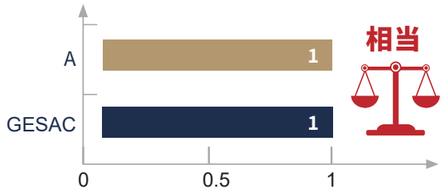

加工零件数量/件
Number of Processed Parts

案例8：液压系统-液压油缸缸筒
Case8: Hydraulic System-Hydraulic Cylinder

加工方式 Processing Methods	液压油缸刮辊粗加工 Rough skiving of Hydraulic Cylinder
刀片型号 Indexable Inserts	LNEF080505-EPM-GP1105S
刀体 Cutter Holder	D160专用刀体 Special cutter holder with D160
加工材料 Workpiece	冷轧（型材）：ZNQ720 Cold Rolled Steel：ZNQ720
切削速度 Cuting Speed	Vc=151m/min
进给速度 Feed	Fn=2mm/rev
切深量 Cutting Depth	Ap=0.4-0.5mm
加工设备 Equipment	专机 Special machine tool
冷却方式 Cooling Method	乳化液，外冷 emulsion, external cooling
切削效果 Processing Result	表面光洁度好，寿命满足客户要求 The quality of the machined surface is good, the service life can meet the customer's requirements

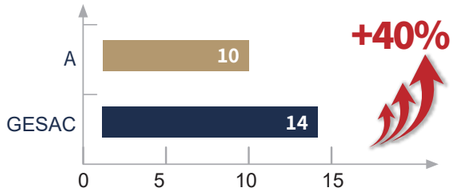

加工零件数量/件
Number of Processed Parts

案例9：液压系统-液压油缸缸筒
Case9: Hydraulic System-Hydraulic Cylinder

加工方式 Processing Methods	液压油缸刮削加工 Skiving of Hydraulic Cylinder
刀片型号 Indexable Inserts	LNEF171204-PF1-GP1105S
刀体 Cutter Holder	D170专用刀体 Special cutter holder with D170
加工材料 Workpiece	Q345B，HB220-250
切削速度 Cuting Speed	Vc=155m/min
进给速度 Feed	Fn=3.48mm/rev
切深量 Cutting Depth	Ap=0.6mm
加工设备 Equipment	专机 Special machine tool
冷却方式 Cooling Method	乳化液，外冷 emulsion, external cooling
切削效果 Processing Result	断屑更好，表面质量和寿命满足客户要求 The performance of chip-breaking is better, The quality of the machined surface and the service life can meet the customer's requirements

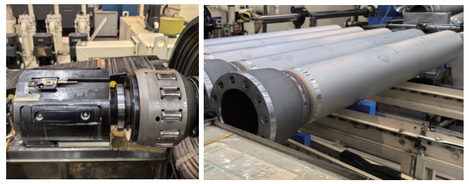

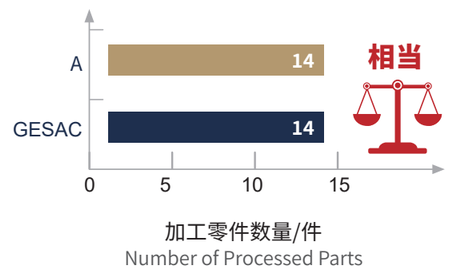

案例10：液压系统-液压油缸缸筒
Case10: Hydraulic System-Hydraulic Cylinder

加工方式 Processing Methods	外径切槽 Grooving of the outer circle
刀片型号 Indexable Inserts	GTD200C020-MT-GP1120
刀体 Cutter Holder	GTER2525M-C08
加工材料 Workpiece	调质45#钢，HB217-255 Quenched and tempered 45# steel, HB217-255
切削速度 Cuting Speed	Vc=104m/min
进给速度 Feed	Fn=0.08mm/rev
切深量 Cutting Depth	Ap=4mm
加工设备 Equipment	卧式车床 Horizontal lathes
冷却方式 Cooling Method	乳化液，外冷 emulsion, external cooling
切削效果 Processing Result	表面光洁度好，寿命满足客户要求 The quality of the machined surface is good, the service life can meet the customer's requirements

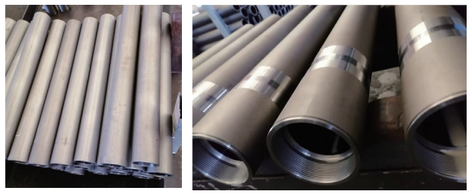

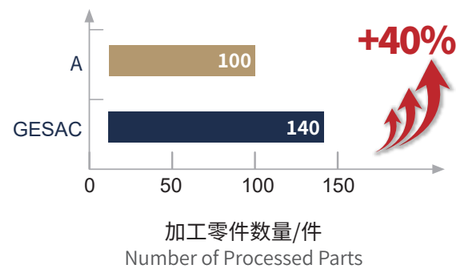

案例11：回转机构-回转支承
Case11: Swing Mechanism-Ring

加工方式 Processing Methods	钻孔加工 Drilling
刀片型号 Indexable Inserts	SOMT060204-C-DP1-GM4240 QPMG060204-DP-GA4230
刀体 Cutter Holder	GTD-220-5D-FC25-Q06S
加工材料 Workpiece	50Mn，HB220-250
切削速度 Cuting Speed	Vc=124.3m/min
进给速度 Feed	Fn=0.088mm/rev
切深量 Cutting Depth	94mm
加工设备 Equipment	钻床 Drilling machine
冷却方式 Cooling Method	水基乳化液/内冷 Emulsion, internal cooling
切削效果 Processing Result	断屑性能、寿命满足客户要求 The performance of chip-breaking and service life can meet the customer's requirements

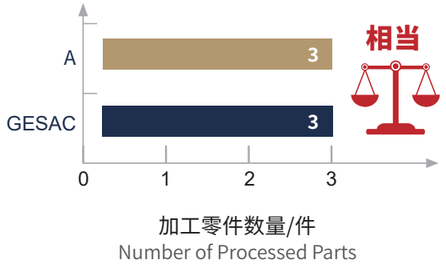

案例12：回转机构-回转支承
Case12: Swing Mechanism-Ring

加工方式 Processing Methods	外圆车削 Turning of the outer circle
刀片型号 Indexable Inserts	CNMG190616-PR-GP1225
刀体 Cutter Holder	DCLNR3232P19
加工材料 Workpiece	42CrMo，HRC28-32
切削速度 Cuting Speed	Vc=119m/min
进给速度 Feed	Fn=0.5mm/rev
切深量 Cutting Depth	Ap=4-6mm
加工设备 Equipment	立式车床 Vertical lathe
冷却方式 Cooling Method	乳化液，外冷 emulsion, external cooling
切削效果 Processing Result	断屑性能、寿命满足客户要求 The performance of chip-breaking and service life can meet the customer's requirements

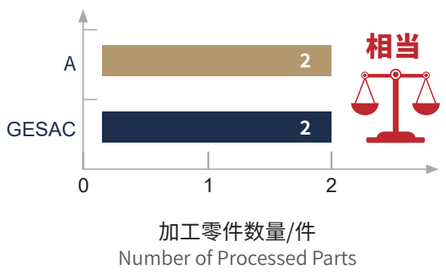

案例13：转向架系统-火车轮
Case13：Bogie System-Train Wheel

加工方式 Processing Methods	辐板粗加工 Rough machining of spoke plates
刀片型号 Indexable Inserts	RCMX250700-RR1-GP1105R
刀体 Cutter Holder	PRDCN3232P25
加工材料 Workpiece	CL65(热轧钢) Hot-rolled steel
切削速度 Cuting Speed	VC=62-105 m/min
进给速度 Feed	Fr=1.5-2.0 mm/rev
切深量 Cutting Depth	AP=3-5mm
加工设备 Equipment	数控立车 CNC vertical lathe
冷却方式 Cooling Method	干切 Dry cutting
切削效果 Processing Result	断屑及寿命良好，达进口品牌水平 Good chip breakage and lifespan, reaching the level of imported brands

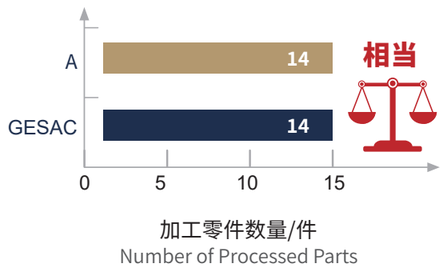

案例14：转向架系统-火车轮
Case14：Bogie System-Train Wheel

加工方式 Processing Methods	辐板精加工 Finish machining of spoke plates
刀片型号 Indexable Inserts	RCMX320900-RR-GP1105R
刀体 Cutter Holder	非标定制刀体 Non standard customized blade body
加工材料 Workpiece	ER7
切削速度 Cuting Speed	VC=208 m/min
进给速度 Feed	竞品Competitor：Fr=0.9 mm/rev 金鹭GESAC：Fr=1.2 mm/rev
切深量 Cutting Depth	AP=0.2mm
加工设备 Equipment	双刀架立车 Double knife frame vertical lathe
冷却方式 Cooling Method	乳化液，外冷 emulsion, external cooling
切削效果 Processing Result	在满足表面质量的前提下， 寿命较竞品提升66%，效率提升30% On the premise of meeting the surface quality, the lifespan is increased by 66% compared to competitors, and the efficiency is increased by 30%

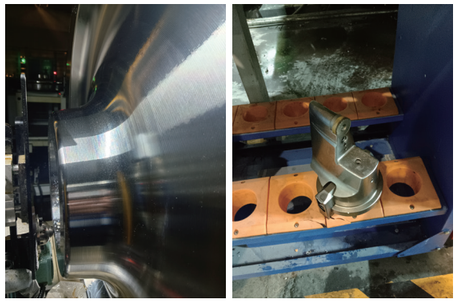

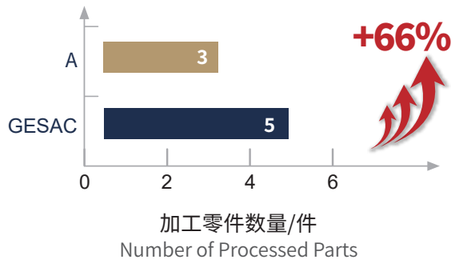

案例15：转向架系统-火车轮
Case15：Bogie System-Train Wheel

加工方式 Processing Methods	踏面修复 Tread restoration
刀片型号 Indexable Inserts	LNMX191940-HM-GP1115R
刀体 Cutter Holder	XZNR5055X-A
加工材料 Workpiece	CL70（热轧钢） Hot-rolled steel
切削速度 Cuting Speed	VC=54m/min
进给速度 Feed	Fr=1.0mm/r
切深量 Cutting Depth	AP=4mm
加工设备 Equipment	专机 Special machine tool
冷却方式 Cooling Method	干切 Dry cutting
切削效果 Processing Result	耐磨性良好，较竞品提升20% Good wear resistance, increased by 20% compared to competitors

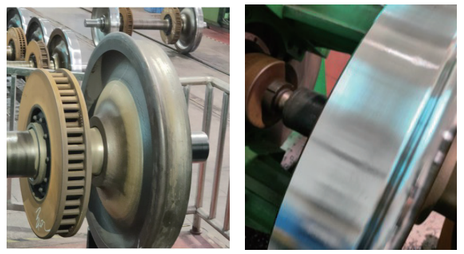

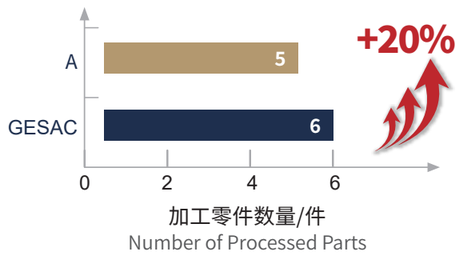

案例16：转向架系统-构架
Case16：Bogie System-Frame

加工方式 Processing Methods	转向架构架平面铣削 Milling of steering frame plane
刀片型号 Indexable Inserts	SNMU1607ANEN-GM-GM2140A
刀体 Cutter Holder	MFB245-125R08B40-SN16U
加工材料 Workpiece	16Mn调质钢 Tempered steel
切削速度 Cuting Speed	VC=196 m/min
进给速度 Feed	Fz=0.2mm/z
切深量 Cutting Depth	Ap=5-8mm/Ae=60-125mm
加工设备 Equipment	龙门铣床 Quenched and tempered steel
冷却方式 Cooling Method	干切 Dry cutting
切削效果 Processing Result	单个刃寿命和竞品相当，有效刃数多1倍 The lifespan of a single blade is comparable to that of its competitors, with twice the effective blade count

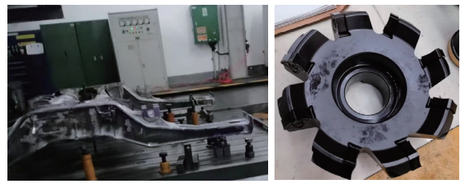

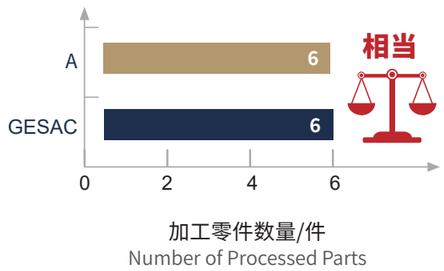

MEMO

MEMO